CONFIDENTIAL

Document No : UniKL MFI_SD_AC41
Revision No: 02
Effective Date: 01 December 2008

SET A

UNIVERSITI KUALA LUMPUR
Malaysia France Institute

FINAL EXAMINATION

SEPTEMBER 2014 SESSION

SUBJECT CODE	:	**FGB41103**
SUBJECT TITLE	:	**ADVANCED MANUFACTURING TECHNOLOGY**
LEVEL	:	**BACHELOR**
TIME / DURATION	:	**3.00 PM – 5.30 PM (2.5 HOURS)**
DATE	:	**2 JANUARY 2015**

INSTRUCTIONS TO CANDIDATES

1. **Please read the instructions given in the question paper CAREFULLY.**
2. **This question paper is printed on both sides of the paper.**
3. **Please write your answers on the answer booklet provided.**
4. **Answers should be written in blue or black ink except for sketching, graphic and illustration.**
5. **This question paper consists of TWO (2) sections. Section A and B. Answer ALL questions in Section A. For Section B, answer THREE (3) questions only.**
6. **Answer all questions in English.**

THERE ARE 5 PAGES OF QUESTIONS, EXCLUDING THIS PAGE.

SECTION A (Total: 40 marks)

INSTRUCTION: Answer ALL questions.
Please use the answer booklet provided.

Question 1

(a) Bottle neck station may happen in manufacturing line due to some reasons.

(i) Define the meaning of 'Bottle neck station'.

(3 marks)

(ii) Suggest two (2) causes of bottle neck station and suggest the solution for each cause.

(4 marks)

(b) Figure 1 shows the time taken at eight different work stations or processes at one production line.

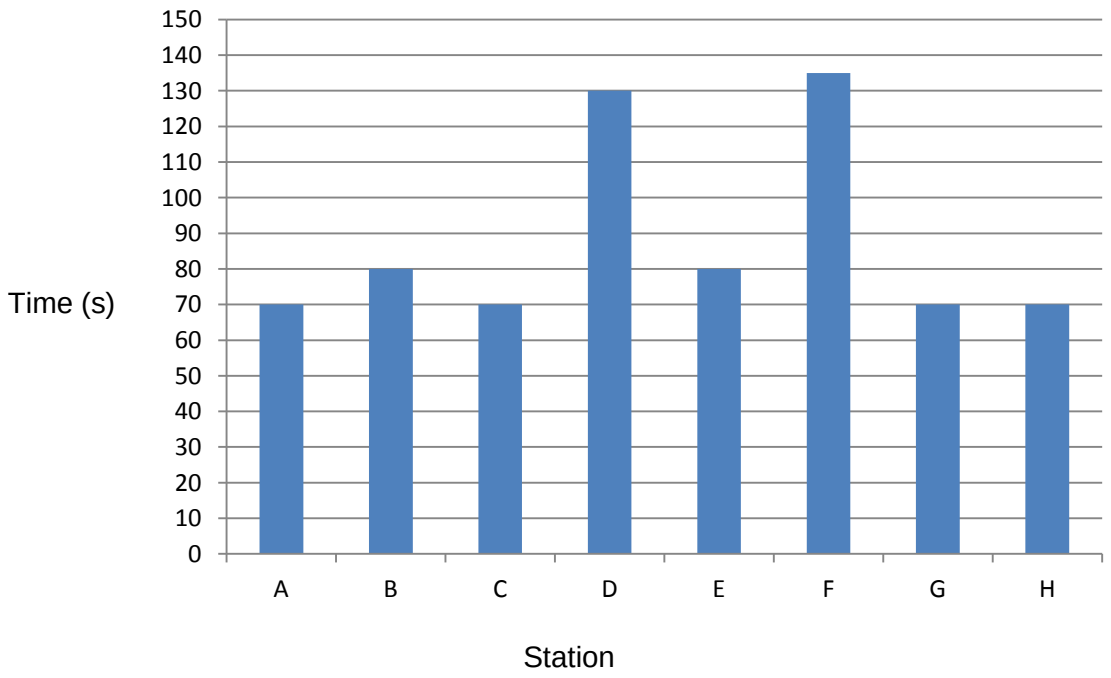

Figure 1

(i) Identify the location of bottle neck station at this production line as in Figure 1.

(2 marks)

(ii) Propose three quick solutions for this bottle-neck station and briefly explain your suggestion.

(6 marks)

(iii) Calculate the new production rate for this line (after the solution of bottle-neck problem).

(5 marks)

Question 2

Remanufacturing is one of the important approaches in Design for Environment (DFE)

(a) Explain the process flow for Remanufacturing activity.

(8 marks)

(b) Determine and explain three (3) part selection criterions in the remanufacturing of the automotive parts.

(6 marks)

(b) Design for Environment Packaging (DFE) in manufacturing is considering few factors for example reusable pallets and packaging. Identify three (3) more factors considered under DFE and briefly explain each of them.

(6 marks)

SECTION B (Total: 60 marks)

INSTRUCTION: Answer only THREE questions.
Please use the answer booklet provided.

Question 3

The manufacturing of Integrated Circuit (IC) is involving an advance technology. Three main important processes in IC preparations are silicon processing, IC fabrication and packaging.

(a) Czochralski Process is one of the processes involves in silicon ingots preparation. By using appropriate diagrams, explain the procedure involve in the Czochralski Process.

(7 marks)

(b) The number of chip fabricated per wafer in IC manufacturing can be estimated by using Equation 1. Consider silicon ingot with 2.5m length, 130mm radius, chips area 25mm^2 and wafer thickness 0.95mm. Calculate the number of chips that can be fabricated from this silicon ingot at 96% production efficiency.

$$n_c = 0.34 \left[\frac{D_w}{L_c} \right]^{2.25}$$

Equation 1

(10 marks)

(c) Equation 1 is used for approximation to count the chips quantity in one silicon ingot. Briefly discuss on the accuracy of this equation.

(3 marks)

Question 4

Computer Aided Design (CAD) software is widely used in current designing stage of a product. The CAD software operation is involving a complex matrix multiplication which is done by the microprocessor. Consider point A which is located at (11,12,5) in the xyz coordinate system. By using Homogeneous Transformation Matrix (HTM) method, find the new location of point Z if:

(a) Point A is translated 5 points and rotated 65 degree along x-axis.

(5 marks)

(b) Point A is translated 12 points along y-axis and then rotated for 115^0 along z-axis.

(5 marks)

(c) Point A is rotated for 21^0 in the z-axis and then rotated for 66^0 in the x-axis.

(5 marks)

(d) Point A is rotated 58^0 in the y-axis and then 'mirror' at yz plane.

(5 marks)

Question 5

Rapid Prototyping (RP) is a family of fabrication methods to make engineering prototypes in minimum possible lead time base on 3D Computer Aided Design (CAD) drawing.

(a) RP method can be classified into different categories based on the starting materials in the RP process. Identify two (2) starting materials and one example of RP method for each method.

(4 marks)

(b) Identify three (3) main differences in RP technology between Fuse Deposition Modeling (FDM) and 3D Printing.

(6 marks)

(c) Time taken to complete a 3D build-up or printing in RP can be estimated by using "Layer Completion Time Equation". By using this equation, estimate the time taken to

build or print part in Figure 2. Given v = 157mm/s, D=0.15mm, T_r = 2.5s and layer thickness is 0.12mm.

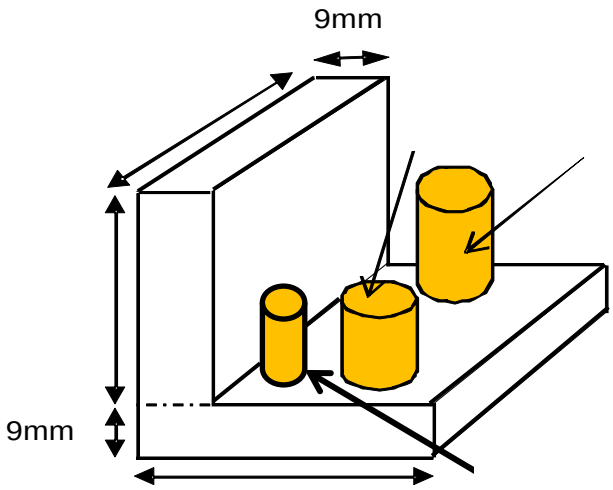

Figure 2

(10 marks)

Question 6

Reverse engineering (RE) often involves taking something apart and analyzing its workings in detail to be used in maintenance or to try to make a new device or program that does the same thing without copying anything from the original.

(a) RE can be applied in different DFX (Design for X) categories such as Design for Assembly, Design for Ergonomics and also Design for Environment. Give one example of RE for each DFX category listed above and briefly discuss each of them.

(9 marks)

(b) Discuss two kinds of features of part that cannot be scanned using 3D scanner

(4 marks)

(c) Laser scanning method (Non-contact active) is one of the 3D scanning technologies currently available. By analyzing the working principle of this method, explain two advantages and two disadvantages of this scanning technology.

(8 marks)

END OF QUESTION