Document No : UniKL MFI_SD_AC41
Revision No: 02
Effective Date: 01 December 2008

CONFIDENTIAL

SET A

UNIVERSITI KUALA LUMPUR
Malaysia France Institute

FINAL EXAMINATION

SEPTEMBER 2014 SESSION

SUBJECT CODE	:	**FED10202**
SUBJECT TITLE	:	**ELECTRICAL PRINCIPLES**
LEVEL	:	**DIPLOMA**
TIME / DURATION	:	**2.00 PM – 4.00 PM (2 HOURS)**
DATE	:	**29 DECEMBER 2014**

INSTRUCTIONS TO CANDIDATES

1. **Please read the instructions given in the question paper CAREFULLY.**
2. **This question paper is printed on both sides of the paper.**
3. **Please write your answers on the answer booklet provided.**
4. **Answers should be written in blue or black ink except for sketching, graphic and illustration.**
5. **This question paper consists of TWO (2) sections. Section A and B. Answer all questions in Section A. For Section B, answer two (2) question only.**
6. **Answer all questions in English.**

THERE ARE 5 PAGES OF QUESTIONS, EXCLUDING THIS PAGE.

SECTION A (Total:60 marks)

INSTRUCTION: Answer ALL questions.

Please use the answer booklet provided.

Question 1

The circuit diagram of an automotive lighting system is shown in **Figure 1** below

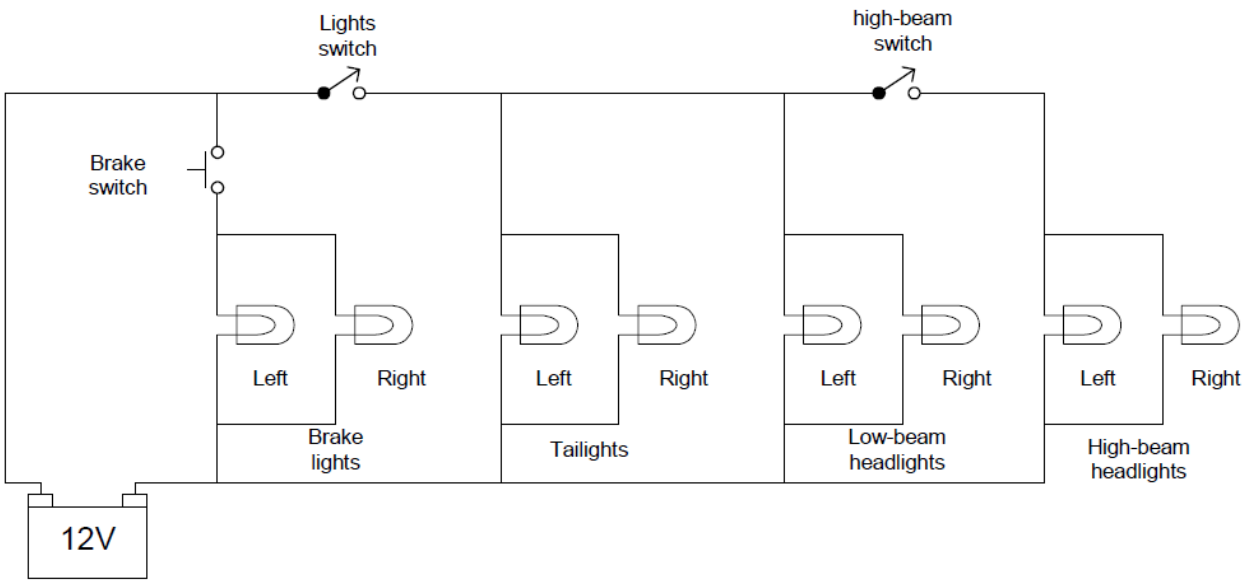

Figure 1

(a) If lights switch is closed to switch on tail light and low beam lights. Determine :

(i) Current generated by battery, IT.

(ii) Branch current for this circuit, assume all lamps has 1 k Ohm resistance.

(10 marks)

(b) Repeat question 1 (a), if all switches are closed.

(10 marks)

Question 2

For the circuit shown in **Figure 2**, the current through resistor R_2 is 10m A. Determine:

(a) The supply voltage and voltage drop across each resistor**.**

(6 marks)

(b) The current through each resistor.

(8 marks)

(c) The total power delivered by the source.

(4 marks)

(d) The minimum current rating for the fuse in the circuit.

(2 marks)

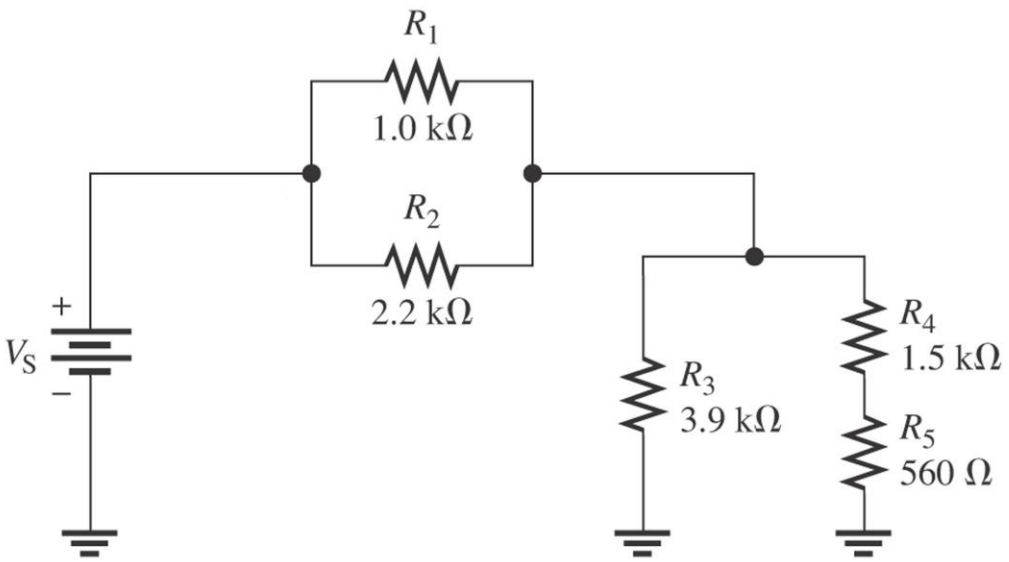

Figure 2

Question 3

Figure 3 shows Sine wave B as reference. Sine wave A and C are shifted. Determine:

(a) the Vp, Vpp, Vrms and Vavg for each sine wave.

(10 marks)

(b) the instantaneous value at the 90° and 170° reference point on the horizontal axis for each sine wave.

(10 marks)

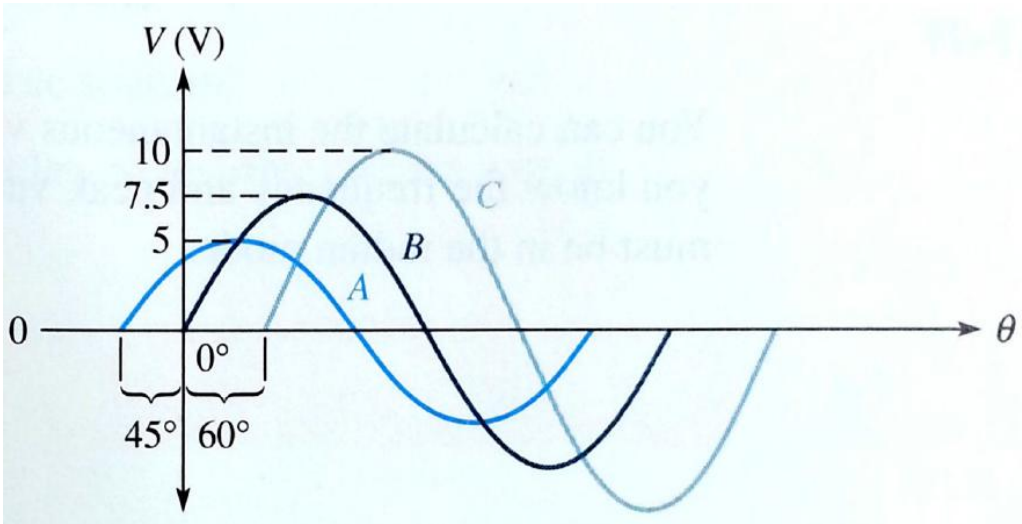

Figure 3

SECTION B (Total: 40 marks)

INSTRUCTION: Answer TWO (2) questions only

Please use the answer booklet provided.

Question 4

(a) Describe the basic construction of a capacitor.

(5 marks)

(b) Describe the charging and discharging process of a capacitor.

(5 marks)

(c) The capacitors shown in the circuit of **Figure 4** are initially uncharged.

(i) After the switch is closed, calculate the total charge supplied by the source.

(5 marks)

(ii) Determine the voltage across each capacitor after the switch is closed.

(5 marks)

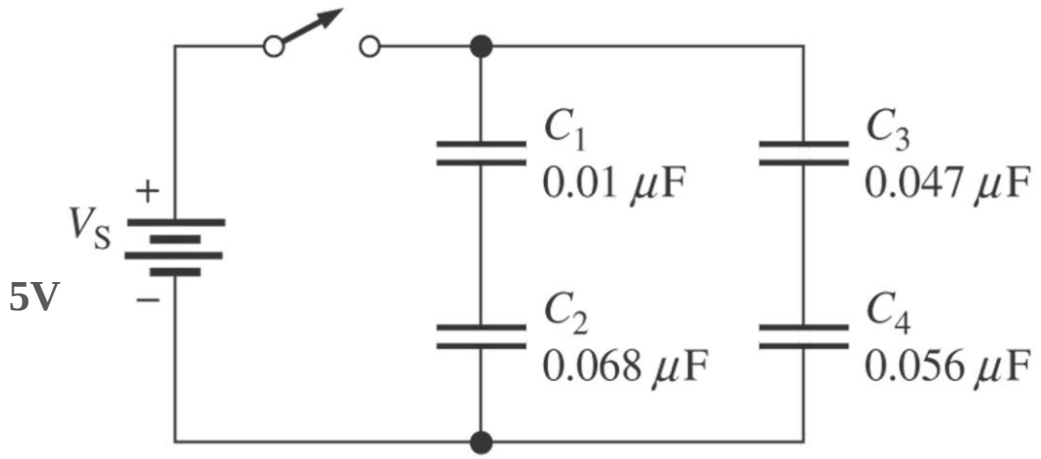

Figure 4

Question 5

A transformer is rated at 5kVA. 2400/120Vac, at 60Hz.

(a) Determine the turn ratio if the 120V is the secondary voltage.

(5 marks)

(c) Determine the current rating of the secondary if 2400V is the primary voltage.

(7 marks)

(c) Determine the current rating of the primary winding if 2400V is the primary voltage.

(8 marks)

Question 6

For the circuit shown in **Figure 5**, determine:

(a) The time constant, τ.

(5 marks)

(b) Current at time τ, 2τ, 3τ, 4τ and 5τ measured from the switch is closed.

(10 marks)

(c) The physical properties that affect inductance.

(5 marks)

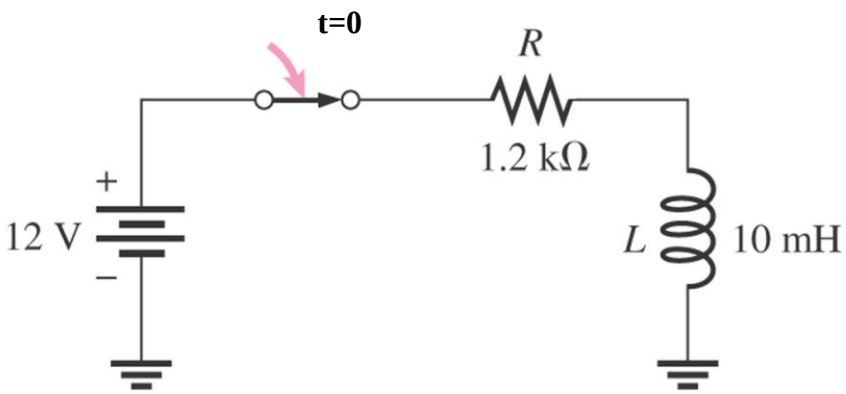

Figure 5

END OF QUESTION PAPER