Document No : UniKL MFI_SD_AC41
Revision No: 02
Effective Date: 01 December 2008

SET A

UNIVERSITI KUALA LUMPUR
Malaysia France Institute

FINAL EXAMINATION

SEPTEMBER 2014 SESSION

SUBJECT CODE	:	**NMB21404**
SUBJECT TITLE	:	**ENGINEERING MECHANICS 2**
LEVEL	:	**BACHELOR**
TIME / DURATION	:	**9.00 AM – 12.30 PM (3.5 HOURS)**
DATE	:	**11 JANUARY 2015**

INSTRUCTIONS TO CANDIDATES

1. **Please read the instructions given in the question paper CAREFULLY.**
2. **This question paper is printed on both sides of the paper.**
3. **Please write your answers on the answer booklet provided.**
4. **Answers should be written in blue or black ink except for sketching, graphic and illustration.**
5. **This question paper consists of FIVE (5) questions. Answer FOUR (4) questions only.**
6. **Answer all questions in English.**
7. **Formula sheet is appended**

THERE ARE 6 PAGES OF QUESTIONS AND 1 PAGE OF APPENDIX, EXCLUDING THIS PAGE.

INSTRUCTION: Answer only FOUR questions.

Please use the answer booklet provided.

This question paper consists of FIVE (5) questions. Answer FOUR (4) questions only.

Question 1

i. The acceleration of a particle as it moves along a straight line is given by $a = (4t^3 - 1)$ m/s^2 where t is in seconds. If s = 2 m and v = 5 m/s when t = 0 determine the particle's velocity and position when t = 5 s. Also, determine the total distance the particle travels during this time period

(5 marks)

ii. A motorcycle starts from rest at s = 0 and travels along a straight line with the speed described by the graph. Construct the s–t and a–t graph for the time interval 0 < t < 50s

(10 marks)

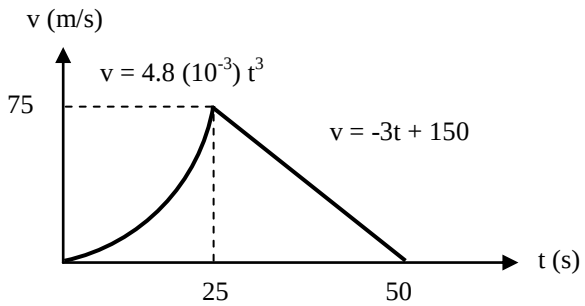

Figure 1

iii. 2 balls are to be kick at an angle of 40° from point *A* as shown in the Figure 2. Determine the time between kicks so that each balls hit basket *B* and *C* at the same instant. At what speed for each ball to be kick?

(10 marks)

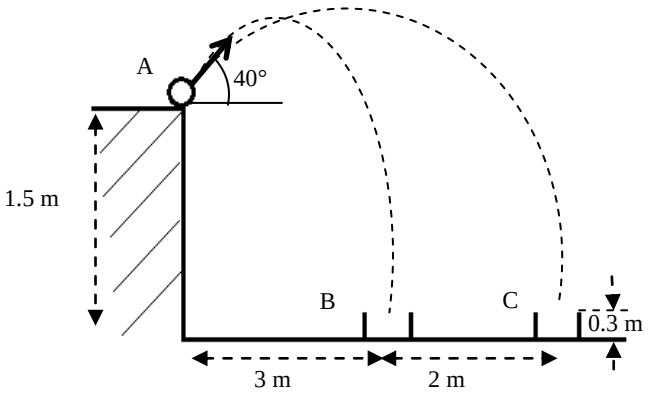

Figure 2

Question 2

i. Spring B of 750 mm length and two Spring C of 650 mm length are compressed and confined by the plate *P*, which can slide freely along the vertical 600 mm long rods. The 50-kg block has given initial speed of v = 5 m/s when it is at h = 2.5 m above the plate. Determine how far the plate moves downwards when the block momentarily stops after striking it. Neglect the mass of the plate. The system is shown in the Figure 3. Stiffness for spring B is 25 kN/m and Spring C is 12 kN/m.

(15 marks)

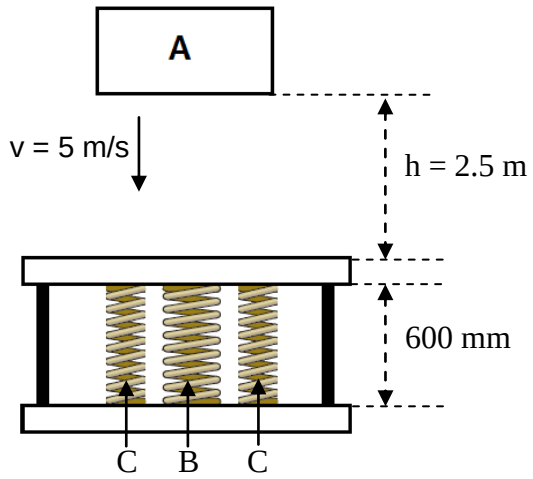

Figure 3

ii. Two smooth disks *A* and *B* each have a mass of 0.5 kg. If both disks are moving with the velocities shown when they collide. Determine their final velocities just after collision. The coefficient of restitution is e = 0.75.

(10 marks)

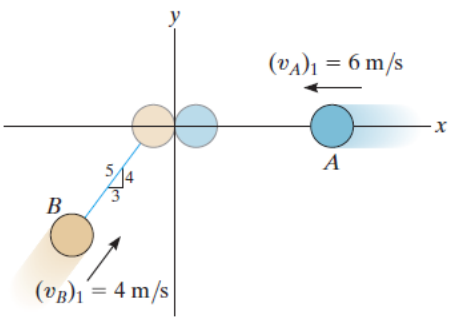

Figure 4

Question 3

i. Starting from rest Block B is at when s = 0, pulley A is given a constant angular acceleration α_A = 6 rad/s^2. Determine the speed of block B when it has risen s = 6 m. The pulley has an inner hub C which is fixed to D and turns with it. Radius Pulley A is 50 mm, Pulley B is 150 mm and pulley C is 75 mm.

(6 marks)

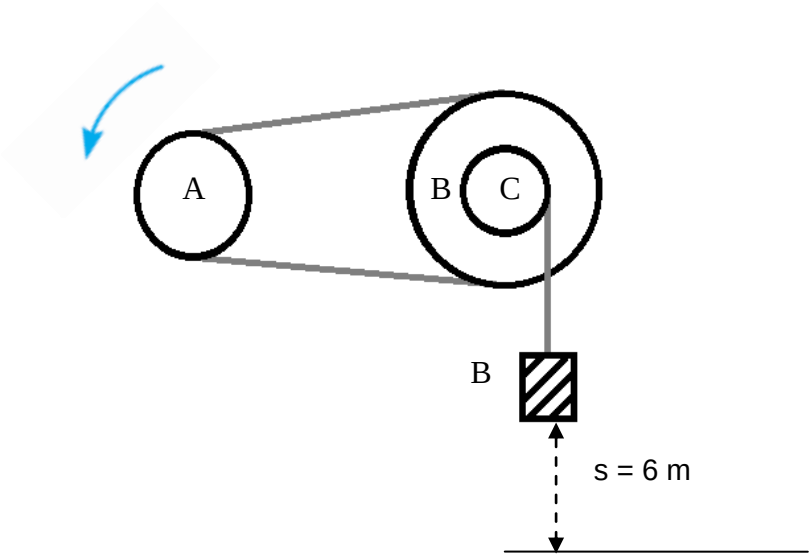

Figure 5

ii. At a given instant, the slider block *A* has the velocity and deceleration as shown in Figure 6. Determine the acceleration of block *B* and the angular acceleration of the link at this instant.

(8 marks)

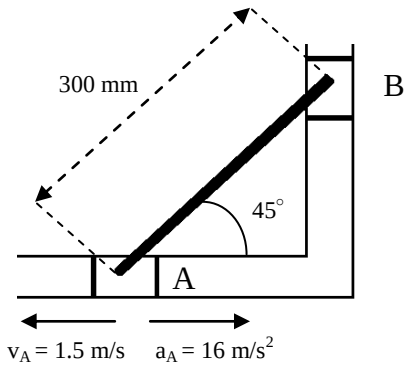

Figure 6

iii. The center *O* of the gear and the gear rack *P* move with the velocities and accelerations shown in Figure. Determine the angular acceleration of the gear and the acceleration of point *B* located at the rim of the gear at the instant as shown in Figure 7

(11marks)

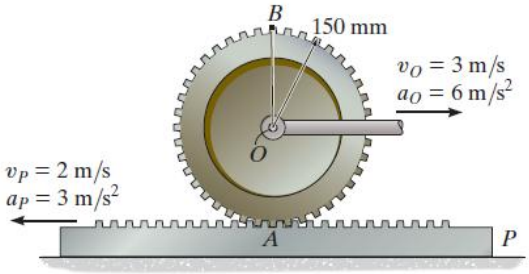

Figure 7

Question 4

i. The pendulum consists of two slender rods AB and OC which have a mass of 3 kg/m. The thin plate has a mass of 12 kg/m^2

a) Determine the location of the center of mass G of the pendulum

b) Calculate the moment of inertia of the pendulum about an axis perpendicular to the page and passing through G

c) Determine the moment of inertia of the pendulum about an axis perpendicular to the page and passing through the pin at O.

(12 marks)

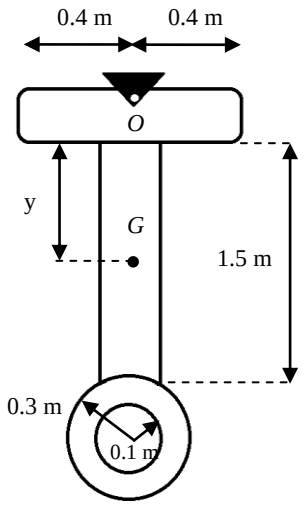

Figure 8

ii. Putty D of mass 2 kg strikes the uniform 10 kg plank *ABC* with a velocity of 10 m/s. If the putty remains attached to the plank, determine the maximum angle θ of swing before the plank momentarily stops. Neglect the size of the putty.

(13 marks)

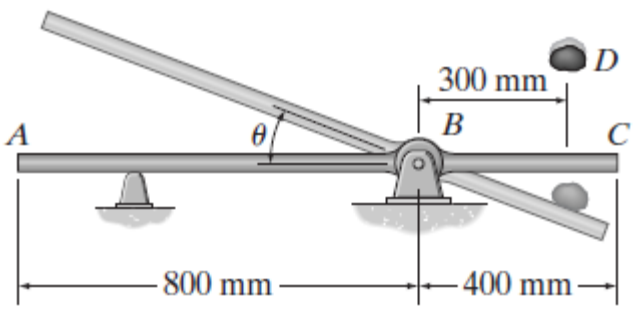

Figure 9

Question 5

Four masses W_1, W_2, W_3 and W_4 at radii of 225 mm, 175 mm, 250 mm and 300 mm are connected at angles of zero, 45°, 75° and 120° from horizontal line as shown. If the shaft rotates at 500 rpm, find what unbalanced force acts upon the shaft and at what angle from mass W1. If a mass to balance the system can be placed at a radius of 200 mm, find the weight of the mass. Take W_1 = 1000 N, W_2 = 1500 N, W_3 = 1200 N and W_4 = 800 N

(25 marks)

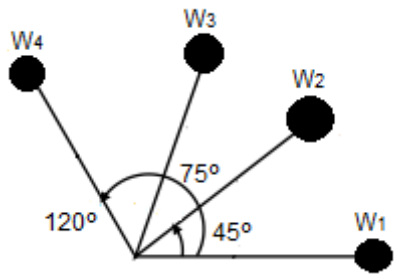

Figure 10

END OF QUESTION

APPENDIX

$$v = v_o + at$$

$$v^2 = v_o^2 + 2a\,(s - s_o)$$

$$s = s_o + vt + \tfrac{1}{2}\,at^2$$

$$F_s = ks$$

$$T_1 + \Sigma U_{1\text{-}2} = T_2$$

$$U_{spring\ (1\text{-}2)} = -(\tfrac{1}{2}\,ks_2^2 - \tfrac{1}{2}\,ks_1^2)$$

$$x = \frac{-b \pm \sqrt{b^2 - 4ac}}{2a}$$

$$mv_1 + \int_{t1}^{t2} F\,dt = mv_2$$

$$(H_G)_1 + \int M_G\,dt = (H_G)_2$$

$$I_G = mk_g^2$$

$$T = \tfrac{1}{2}\,mv^2 = \tfrac{1}{2}\,I_G\omega$$

$$F = ma = ma_t = ma_n = m\omega^2 r$$

$$I_{Rod} = ml^2/12$$

$$I_{Rod} = ml^2/3$$

$$I_{Plate} = mr^2/2$$