Document No : UniKL MFI_SD_AC41
Revision No: 02
Effective Date: 01 December 2008

CONFIDENTIAL

SET A

UNIVERSITI KUALA LUMPUR
Malaysia France Institute

FINAL EXAMINATION

SEPTEMBER 2014 SESSION

SUBJECT CODE	:	**FSD23102**
SUBJECT TITLE	:	**MICROPROCESSOR**
LEVEL	:	**DIPLOMA**
TIME / DURATION	:	**2.00 PM – 4.00 PM (2 HOURS)**
DATE	:	**10 JANUARY 2015**

INSTRUCTIONS TO CANDIDATES

1. **Please read the instructions given in the question paper CAREFULLY.**
2. **This question paper is printed on both sides of the paper.**
3. **Please write your answers on the answer booklet provided.**
4. **Answer should be written in blue or black ink except for sketching, graphic and illustration.**
5. **This question paper consists of TWO (2) sections. Section A and B. Answer all questions in Section A. For Section B, answer two (2) questions only.**
6. **Answer all questions in English.**

THERE ARE 8 PAGES OF QUESTIONS AND 2 PAGES OF APPENDICES, EXCLUDING THIS PAGE.

SECTION A (Total: 60 marks)

INSTRUCTION: Answer ALL questions.

Please use the answer booklet provided.

Question 1

(a) List three (3) devices containing microprocessor.

(3 marks)

(b) List three (3) main components in Microprocessor System?

(3 marks)

(c) Explain the function of memory in microprocessor based system.

(2 marks)

(d) List and briefly explain two (2) types of memory in microprocessor based system.

(4 marks)

(e) Figure 1 shows the CPU and Memory condition during CPU Execution Cycle. Based on the figure, answer the following questions.

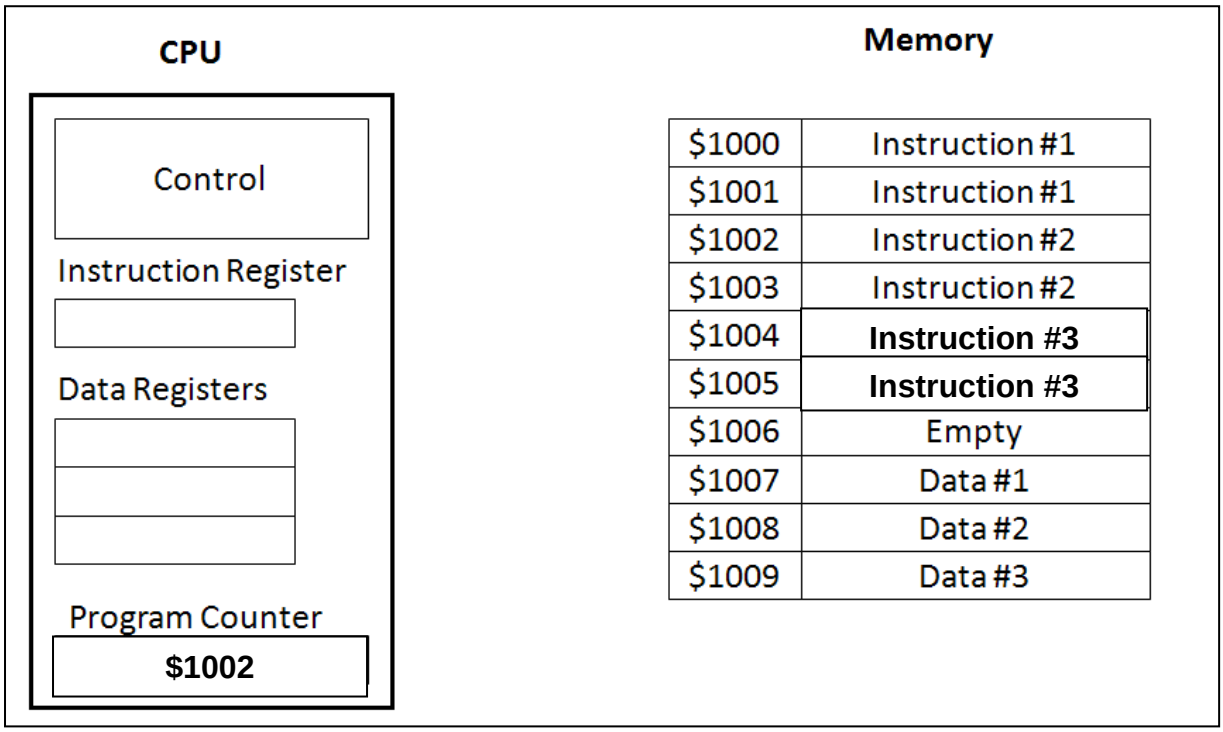

Figure 1: CPU and memory contents during CPU Execution Cycle

i. Explain details on each step of ***Fetch*** and ***Decode*** cycle on the instruction that will be executed.

(6 marks)

ii. Briefly explain on the function of CPU.

(2 marks)

Question 2

(a) Fill in the blanks with correct answers for the following questions:

i. M68000 is capable working with three main data sizes. The .B, .W and .L terms stand for _____ , _____and _____.

(3 marks)

ii. The function of Condition Code Register is _____. This register consist of 5 bits flags which are _____.

(3 marks)

iii. _____ is reserved for Stack Pointer. In Stack Pointer, it call _____ to put items on to stack and_____ to take items from stack in _____ basis.

(4 marks)

iv. The function of Address Register is _____.

(2 marks)

(b) Figure 2 shows the Pin Assignment for M68000 microprocessor. Based on this figure, answer the following questions:

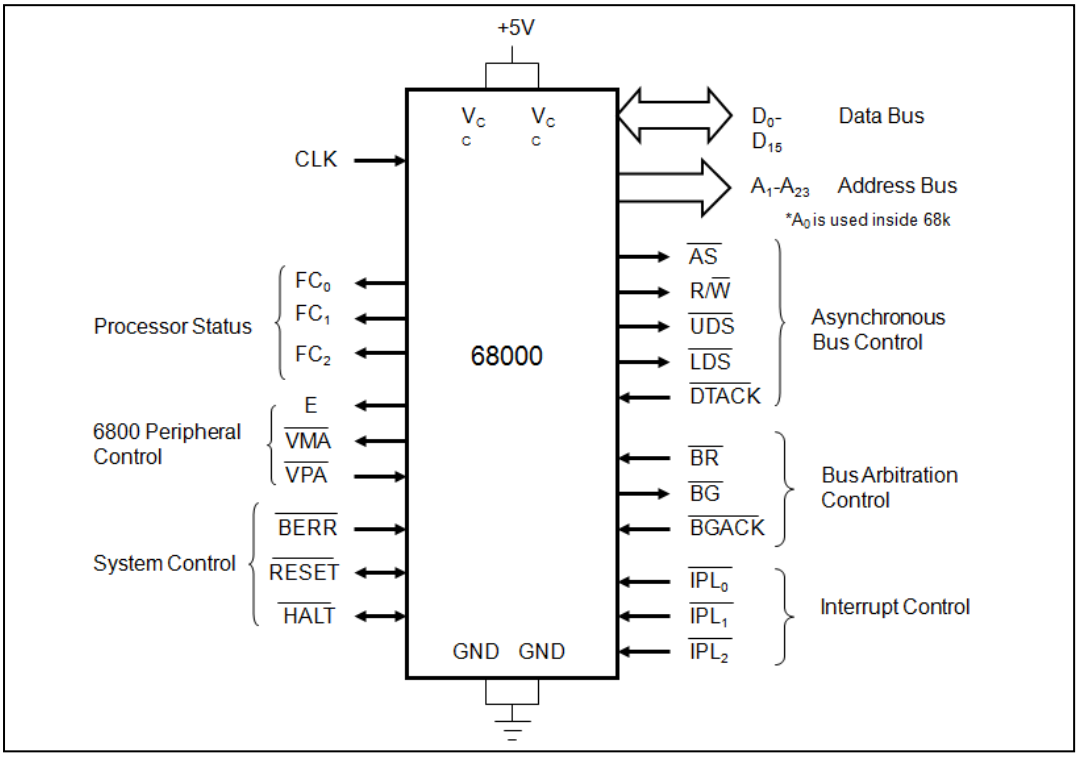

Figure 2: Pin Assignment for M68000 microprocessor.

i. Describe the function of CLK pin.

(2 marks)

ii. Explain the function of R/W pin and list all the three states.

(4 marks)

iii. UDS pin in Asynchronous Bus Control, controlling the _____ while LDS pin controlling the _____.

(2 marks)

Question 3

Convert and perform the arithmetic operation below. You are required to show the conversion procedure algorithmically.

(a) Convert **44** to binary form.

(2 marks)

(b) Perform below calculation. Prove your answers with binary calculation representation.

$ 3A9 + $ 162

(3 marks)

(c) Convert the hexadecimal number **$FA** to decimal form in representation of:

i. Unsigned Number

ii. Signed Number

(4 marks)

(d) By using *two's complement* binary arithmetic, perform the following operation.

Note: Your calculations should be in 8-bit format for integer numbers.

$C8 - 66

(6 marks)

(e) Based on your answer in Question 3 (d), state the status of C-bit and Z-bit in Condition Code Register and justify your answer.

(2 marks)

(f) The Status Register contains of **$278C**. Show the state of Supervisor Flag, Overflow Flag and Carry Flag.

(3 marks)

SECTION B (Total: 40 marks)

INSTRUCTION: Answer TWO (2) questions only

Please use the answer booklet provided.

Question 4

(a) Figure 3 shows the initial values of Address Registers, Data Registers and memory locations in M68000 microprocessor. Based on the figure, answer the following questions.

Initial Values for Address & Data Registers

A0 = $100101
A1 = $100106
A2 = $40040A

D0 = $00006711
D1 = $2424AADD
D2 = $87876565
D3 = $00A1B2C3

Initial Memory

$100100	$AB
$100101	$63
$100102	$98
$100103	$00
$100105	$00
$100106	$79
……..	……
……..	……
$40040A	$FF
$40040B	$FF
$40040C	$FF
$40040D	$FF

Figure 3: Initial Values of Address Registers, Data Registers and Memory.

Explain and show the contents of the affected registers or memory address when each of the following instructions is executed. Each instruction is executed independently from each other. The initial values of the registers and memory are the same before each instruction is executed.

i. `MOVE.L D1, (A2)`

(2 marks)

ii. `MOVE.B $05(A0), D2`

(2 marks)

iii. `ADD.B D0, D3`

(2 marks)

iv. `MOVE.L $100100, D0`

(2 marks)

(b) Answer the questions based on the following assembly language instruction:

```
MOVE.W      #$98BF, $37(A2,D1.W)
```

i. List the addressing mode type.

(2 marks)

ii. If **A2** contains the value of **$00001000** and **D1** with **$ABCD1111**, compute the effective address and show the contents of affected memory address after the instruction is executed.

(3 marks)

iii. If that data size for the given instruction has been changed from word to longword, show the contents of affected memory address after the new instruction is executed.

(2 marks)

(c) Construct a complete assembly language programs to add these three data **$70**, **$58** and **$A2** using byte addition. Calculate the final result after your programs has been executed.

(5 marks)

Question 5

(a) Identify the type of addressing mode in each of the following instructions:

i. `MOVE.B D3, D3`

ii. `MOVE.B D2, (A1)+`

iii. `ADD.W $20(A1, D1.W), D6`

iv. `MOVE.L #$ACAD4569, D0`

(4 marks)

(b) If the longword value **$9876ABCD** is stored in memory beginning at address **$9000**, determine the data contents in memory address **$9001** and **$9003**.

(2 marks)

(c) If **D1** and **D2** contain **$12345678** and **$11111111** respectively, explain the result of the following instructions:

i. `SUB.W D2, D1`

ii. `CMP.W D2, D1`

(4 marks)

(d) Construct a complete assembly language programs to copy twelve (12) bytes of data starting from memory locations **$200200** to memory locations starting **$300200**. Consider the following assembly language programs for the data contain starting from memory location $200200 and continue the programs with your answers.

```
ORG     $200200
DC.B    $45,$76,$45,$48,$75
DC.B    $95,$77,$55,$58,$85
DC.B    $85,$86
```

(10 marks)

Question 6

(a) Figure 4 shows the assembly language programs with memory address after the instructions source has been assembled.

```
                                        LINE :
00001000                                 1          ORG     $1000
00001000                                 2  START:
00001000                                 3
00001000  =0000A78D                      4  NUM1 EQU $A78D
00001000  =0000F10C                      5  NUM2 EQU $F10C
00001000  303C A78D                      6          MOVE.W  #NUM1, D0
00001004  323C F10C                      7          MOVE.W  #NUM2, D1
00001008  207C 00400400                  8          MOVEA.L #$400400, A0
0000100E  1210                           9          MOVE.B  (A0), D1
00001010  3010                          10          MOVE.W  (A0), D0
00001012                                11
00400400                                12          ORG     $400400
00400400= 64BE                          13          DC.W    $64BE
00400402                                14          END     START
```

Figure 4: Assembly language programs with memory address

Based on Figure 4, answer the following questions:

i. State the contents of Program Counter before execution of the first instruction.

(1 mark)

ii. After execution of Line 6 and 7, show the contents that will be stored in **D0** and **D1**.

(2 marks)

iii. Find the memory location where data **$64BE** has been stored.

(2 marks)

iv. After execution of Line 9 and 10, find the data that will be stored in **D0** and **D1**. Briefly explain on the differences in result obtained.

(3 marks)

v. Differentiate between the instruction **MOVE** and **MOVEA**.

(2 marks)

(b) Construct an assembly language program to inspect the contents of memory location **$500000**. If the contents are lower than **40**, multiply the value with **2** and store the result in memory location **$500200**. Otherwise, divide it with **2** and store the result in location **$500300**.

(10 marks)

END OF QUESTIONS

APPENDIX 1: M68K Datasheet

Opcode	Size	Operand	CCR	Effective Address s=source, d=destination, e=either, i=displacement												Operation	Description
	BWL	s,d	XNZVC	Dn	An	(An)	(An)+	-(An)	(i,An)	(i,An,Rn)	abs.W	abs.L	(i,PC)	(i,PC,Rn)	#n		
ABCD	B	Dy,Dx	*U*U*	e	-	-	-	-	-	-	-	-	-	-	-	$Dy_{10} + Dx_{10} + X \rightarrow Dx_{10}$	Add BCD source and eXtend bit to
		-(Ay),-(Ax)		-	-	-	-	e	-	-	-	-	-	-	-	$-(Ay)_{10} + -(Ax)_{10} + X \rightarrow -(Ax)_{10}$	destination, BCD result
ADD [4]	BWL	s,Dn	*****	e	s	s	s	s	s	s	s	s	s	s	s[4]	s + Dn → Dn	Add binary (ADDI or ADDQ is used when
		Dn,d		e	d[4]	d	d	d	d	d	d	d	-	-	-	Dn + d → d	source is #n. Prevent ADDQ with #n.L)
ADDA [4]	WL	s,An	-----	s	e	s	s	s	s	s	s	s	s	s	s	s + An → An	Add address (.W sign-extended to .L)
ADDI [4]	BWL	#n,d	*****	d	-	d	d	d	d	d	d	d	-	-	s	#n + d → d	Add immediate to destination
ADDQ [4]	BWL	#n,d	*****	d	d	d	d	d	d	d	d	d	-	-	s	#n + d → d	Add quick immediate (#n range: 1 to 8)
ADDX	BWL	Dy,Dx	*****	e	-	-	-	-	-	-	-	-	-	-	-	Dy + Dx + X → Dx	Add source and eXtend bit to destination
		-(Ay),-(Ax)		-	-	-	-	e	-	-	-	-	-	-	-	-(Ay) + -(Ax) + X → -(Ax)	
AND [4]	BWL	s,Dn	-**00	e	-	s	s	s	s	s	s	s	s	s	s[4]	s AND Dn → Dn	Logical AND source to destination
		Dn,d		e	-	d	d	d	d	d	d	d	-	-	-	Dn AND d → d	(ANDI is used when source is #n)
ANDI [4]	BWL	#n,d	-**00	d	-	d	d	d	d	d	d	d	-	-	s	#n AND d → d	Logical AND immediate to destination
ANDI [4]	B	#n,CCR	=====	-	-	-	-	-	-	-	-	-	-	-	s	#n AND CCR → CCR	Logical AND immediate to CCR
ANDI [4]	W	#n,SR	=====	-	-	-	-	-	-	-	-	-	-	-	s	#n AND SR → SR	Logical AND immediate to SR (Privileged)
ASL	BWL	Dx,Dy	*****	e	-	-	-	-	-	-	-	-	-	-	-	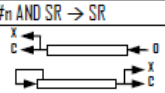	Arithmetic shift Dy by Dx bits left/right
ASR		#n,Dy		d	-	-	-	-	-	-	-	-	-	-	s		Arithmetic shift Dy #n bits L/R (#n: 1 to 8)
	W	d		-	-	d	d	d	d	d	d	d	-	-	-		Arithmetic shift ds 1 bit left/right (.W only)
Bcc	BW[3]	address[2]	-----	-	-	-	-	-	-	-	-	-	-	-	-	if cc true then	Branch conditionally (cc table on back)
																address → PC	(8 or 16-bit ± offset to address)
BCHG	B L	Dn,d	--*--	e[1]	-	d	d	d	d	d	d	d	-	-	-	NOT(bit number of d) → Z	Set Z with state of specified bit in d then
		#n,d		d[1]	-	d	d	d	d	d	d	d	-	-	s	NOT(bit n of d)→ bit n of d	invert the bit in d
BCLR	B L	Dn,d	--*--	e[1]	-	d	d	d	d	d	d	d	-	-	-	NOT(bit number of d) → Z	Set Z with state of specified bit in d then
		#n,d		d[1]	-	d	d	d	d	d	d	d	-	-	s	0 → bit number of d	clear the bit in d
BRA	BW[3]	address[2]	-----	-	-	-	-	-	-	-	-	-	-	-	-	address → PC	Branch always (8 or 16-bit ± offset to addr)
BSET	B L	Dn,d	--*--	e[1]	-	d	d	d	d	d	d	d	-	-	-	NOT(bit n of d) → Z	Set Z with state of specified bit in d then
		#n,d		d[1]	-	d	d	d	d	d	d	d	-	-	s	1 → bit n of d	set the bit in d
BSR	BW[3]	address[2]	-----	-	-	-	-	-	-	-	-	-	-	-	-	PC → -(SP); address → PC	Branch to subroutine (8 or 16-bit ± offset)
BTST	B L	Dn,d	--*--	e[1]	-	d	d	d	d	d	d	d	d	d	-	NOT(bit Dn of d) → Z	Set Z with state of specified bit in d
		#n,d		d[1]	-	d	d	d	d	d	d	d	d	d	s	NOT(bit #n of d) → Z	Leave the bit in d unchanged
CHK	W	s,Dn	-*UUU	e	-	s	s	s	s	s	s	s	s	s	s	if Dn<0 or Dn>s then TRAP	Compare Dn with 0 and upper bound [s]
CLR	BWL	d	-0100	d	-	d	d	d	d	d	d	d	-	-	-	0 → d	Clear destination to zero
CMP [4]	BWL	s,Dn	-****	e	s[4]	s	s	s	s	s	s	s	s	s	s[4]	set CCR with Dn – s	Compare Dn to source
CMPA [4]	WL	s,An	-****	s	e	s	s	s	s	s	s	s	s	s	s	set CCR with An – s	Compare An to source
CMPI [4]	BWL	#n,d	-****	d	-	d	d	d	d	d	d	d	-	-	s	set CCR with d - #n	Compare destination to #n
CMPM [4]	BWL	(Ay)+,(Ax)+	-****	-	-	-	e	-	-	-	-	-	-	-	-	set CCR with (Ax) - (Ay)	Compare (Ax) to (Ay); Increment Ax and Ay
DBcc	W	Dn,addres[2]	-----	-	-	-	-	-	-	-	-	-	-	-	-	if cc false then { Dn-1 → Dn	Test condition, decrement and branch
																if Dn <> -1 then addr →PC }	(16-bit ± offset to address)
DIVS	W	s,Dn	-***0	e	-	s	s	s	s	s	s	s	s	s	s	±32bit Dn / ±16bit s → ±Dn	Dn= [16-bit remainder, 16-bit quotient]
DIVU	W	s,Dn	-***0	e	-	s	s	s	s	s	s	s	s	s	s	32bit Dn / 16bit s → Dn	Dn= [16-bit remainder, 16-bit quotient]
EOR [4]	BWL	Dn,d	-**00	e	-	d	d	d	d	d	d	d	-	-	s[4]	Dn XOR d → d	Logical exclusive OR Dn to destination
EORI [4]	BWL	#n,d	-**00	d	-	d	d	d	d	d	d	d	-	-	s	#n XOR d → d	Logical exclusive OR #n to destination
EORI [4]	B	#n,CCR	=====	-	-	-	-	-	-	-	-	-	-	-	s	#n XOR CCR → CCR	Logical exclusive OR #n to CCR
EORI [4]	W	#n,SR	=====	-	-	-	-	-	-	-	-	-	-	-	s	#n XOR SR → SR	Logical exclusive OR #n to SR (Privileged)
EXG	L	Rx,Ry	-----	e	e	-	-	-	-	-	-	-	-	-	-	register ←→ register	Exchange registers (32-bit only)
EXT	WL	Dn	-**00	d	-	-	-	-	-	-	-	-	-	-	-	Dn.B → Dn.W | Dn.W → Dn.L	Sign extend (change .B to .W or .W to .L)
ILLEGAL			-----	-	-	-	-	-	-	-	-	-	-	-	-	PC→-(SSP); SR→-(SSP)	Generate Illegal Instruction exception
JMP		d	-----	-	-	d	-	-	d	d	d	d	d	d	-	↑d → PC	Jump to effective address of destination
JSR		d	-----	-	-	d	-	-	d	d	d	d	d	d	-	PC → -(SP); ↑d → PC	push PC, jump to subroutine at address d
LEA	L	s,An	-----	-	e	s	-	-	s	s	s	s	s	s	-	↑s → An	Load effective address of s to An
LINK		An,#n	-----	-	-	-	-	-	-	-	-	-	-	-	-	An → -(SP); SP → An;	Create local workspace on stack
																SP + #n → SP	(negative n to allocate space)
LSL	BWL	Dx,Dy	***0*	e	-	-	-	-	-	-	-	-	-	-	-	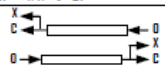	Logical shift Dy, Dx bits left/right
LSR		#n,Dy		d	-	-	-	-	-	-	-	-	-	-	s		Logical shift Dy, #n bits L/R (#n: 1 to 8)
	W	d		-	-	d	d	d	d	d	d	d	-	-	-		Logical shift d 1 bit left/right (.W only)
MOVE [4]	BWL	s,d	-**00	e	s[4]	e	e	e	e	e	e	e	s	s	s[4]	s → d	Move data from source to destination
MOVE	W	s,CCR	=====	s	-	s	s	s	s	s	s	s	s	s	s	s → CCR	Move source to Condition Code Register
MOVE	W	s,SR	=====	s	-	s	s	s	s	s	s	s	s	s	s	s → SR	Move source to Status Register (Privileged)
MOVE	W	SR,d	-----	d	-	d	d	d	d	d	d	d	-	-	-	SR → d	Move Status Register to destination
MOVE	L	USP,An	-----	-	d	-	-	-	-	-	-	-	-	-	-	USP → An	Move User Stack Pointer to An (Privileged)
		An,USP		-	s	-	-	-	-	-	-	-	-	-	-	An → USP	Move An to User Stack Pointer (Privileged)
	BWL	s,d	XNZVC	Dn	An	(An)	(An)+	-(An)	(i,An)	(i,An,Rn)	abs.W	abs.L	(i,PC)	(i,PC,Rn)	#n		

APPENDIX 1: M68K Datasheet (continue)

Opcode	Size	Operand	CCR	Effective Address s=source, d=destination, e=either, i=displacement												Operation	Description
	BWL	s,d	XNZVC	Dn	An	(An)	(An)+	-(An)	(i,An)	(i,An,Rn)	abs.W	abs.L	(i,PC)	(i,PC,Rn)	#n		
MOVEA[4]	WL	s,An	-----	s	e	s	s	s	s	s	s	s	s	s	s	s → An	Move source to An (MOVE s,An use MOVEA)
MOVEM[4]	WL	Rn-Rn,d	-----	-	-	d	-	d	d	d	d	d	-	-	-	Registers → d	Move specified registers to/from memory
		s,Rn-Rn		-	-	s	s	-	s	s	s	s	s	s	-	s → Registers	(.W source is sign-extended to .L for Rn)
MOVEP	WL	Dn,(i,An)	-----	s	-	-	-	-	d	-	-	-	-	-	-	Dn → (i,An)...(i+2,An)...(i+4,A.	Move Dn to/from alternate memory bytes
		(i,An),Dn		d	-	-	-	-	s	-	-	-	-	-	-	(i,An) → Dn...(i+2,An)...(i+4,A.	(Access only even or odd addresses)
MOVEQ[4]	L	#n,Dn	-**00	d	-	-	-	-	-	-	-	-	-	-	s	#n → Dn	Move sign extended 8-bit #n to Dn
MULS	W	s,Dn	-**00	e	-	s	s	s	s	s	s	s	s	s	s	±16bit s * ±16bit Dn → ±Dn	Multiply signed 16-bit; result: signed 32-bit
MULU	W	s,Dn	-**00	e	-	s	s	s	s	s	s	s	s	s	s	16bit s * 16bit Dn → Dn	Multiply unsig'd 16-bit; result: unsig'd 32-bit
NBCD	B	d	*U*U*	d	-	d	d	d	d	d	d	d	-	-	-	0 - d_{10} - X → d	Negate BCD with eXtend, BCD result
NEG	BWL	d	*****	d	-	d	d	d	d	d	d	d	-	-	-	0 - d → d	Negate destination (2's complement)
NEGX	BWL	d	*****	d	-	d	d	d	d	d	d	d	-	-	-	0 - d - X → d	Negate destination with eXtend
NOP			-----	-	-	-	-	-	-	-	-	-	-	-	-	None	No operation occurs
NOT	BWL	d	-**00	d	-	d	d	d	d	d	d	d	-	-	-	NOT(d) → d	Logical NOT destination (1's complement)
OR [4]	BWL	s,Dn	-**00	e	-	s	s	s	s	s	s	s	s	s	s^4	s OR Dn → Dn	Logical OR
		Dn,d		e	-	d	d	d	d	d	d	d	-	-	-	Dn OR d → d	(ORI is used when source is #n)
ORI [4]	BWL	#n,d	-**00	d	-	d	d	d	d	d	d	d	-	-	s	#n OR d → d	Logical OR #n to destination
ORI [4]	B	#n,CCR	=====	-	-	-	-	-	-	-	-	-	-	-	s	#n OR CCR → CCR	Logical OR #n to CCR
ORI [4]	W	#n,SR	=====	-	-	-	-	-	-	-	-	-	-	-	s	#n OR SR → SR	Logical OR #n to SR (Privileged)
PEA	L	s	-----	-	-	s	-	-	s	s	s	s	s	s	-	↑s → -(SP)	Push effective address of s onto stack
RESET			-----	-	-	-	-	-	-	-	-	-	-	-	-	Assert RESET Line	Issue a hardware RESET (Privileged)
ROL	BWL	Dx,Dy	-**0*	e	-	-	-	-	-	-	-	-	-	-	-		Rotate Dy, Dx bits left/right (without X)
ROR		#n,Dy		d	-	-	-	-	-	-	-	-	-	-	s		Rotate Dy, #n bits left/right (#n: 1 to 8)
	W	d		-	-	d	d	d	d	d	d	d	-	-	-		Rotate d 1-bit left/right (.W only)
ROXL	BWL	Dx,Dy	***0*	e	-	-	-	-	-	-	-	-	-	-	-		Rotate Dy, Dx bits L/R, X used then updated
ROXR		#n,Dy		d	-	-	-	-	-	-	-	-	-	-	s		Rotate Dy, #n bits left/right (#n: 1 to 8)
	W	d		-	-	d	d	d	d	d	d	d	-	-	-		Rotate destination 1-bit left/right (.W only)
RTE			=====	-	-	-	-	-	-	-	-	-	-	-	-	(SP)+ → SR; (SP)+ → PC	Return from exception (Privileged)
RTR			=====	-	-	-	-	-	-	-	-	-	-	-	-	(SP)+ → CCR, (SP)+ → PC	Return from subroutine and restore CCR
RTS			-----	-	-	-	-	-	-	-	-	-	-	-	-	(SP)+ → PC	Return from subroutine
SBCD	B	Dy,Dx	*U*U*	e	-	-	-	-	-	-	-	-	-	-	-	Dx_{10} - Dy_{10} - X → Dx_{10}	Subtract BCD source and eXtend bit from
		-(Ay),-(Ax)		-	-	-	-	e	-	-	-	-	-	-	-	-$(Ax)_{10}$ - -$(Ay)_{10}$ – X →-$(Ax)_{10}$	destination, BCD result
Scc	B	d	-----	d	-	d	d	d	d	d	d	d	-	-	-	If cc is true then 1's → d	If cc true then d.B = 11111111
																else 0's → d	else d.B = 00000000
STOP		#n	=====	-	-	-	-	-	-	-	-	-	-	-	s	#n → SR; STOP	Move #n to SR, stop processor (Privileged)
SUB [4]	BWL	s,Dn	*****	e	s	s	s	s	s	s	s	s	s	s	s^4	Dn - s → Dn	Subtract binary (SUBI or SUBQ used when
		Dn,d		e	d^4	d	d	d	d	d	d	d	-	-	-	d - Dn → d	source is #n. Prevent SUBQ with #n.L)
SUBA [4]	WL	s,An	-----	s	e	s	s	s	s	s	s	s	s	s	s	An - s → An	Subtract address (.W sign-extended to .L)
SUBI [4]	BWL	#n,d	*****	d	-	d	d	d	d	d	d	d	-	-	s	d - #n → d	Subtract immediate from destination
SUBQ [4]	BWL	#n,d	*****	d	d	d	d	d	d	d	d	d	-	-	s	d - #n → d	Subtract quick immediate (#n range: 1 to 8)
SUBX	BWL	Dy,Dx	*****	e	-	-	-	-	-	-	-	-	-	-	-	Dx - Dy - X → Dx	Subtract source and eXtend bit from
		-(Ay),-(Ax)		-	-	-	-	e	-	-	-	-	-	-	-	-(Ax) - -(Ay) – X → -(Ax)	destination
SWAP	W	Dn	-**00	d	-	-	-	-	-	-	-	-	-	-	-	bits[31:16]←→bits[15:0]	Exchange the 16-bit halves of Dn
TAS	B	d	-**00	d	-	d	d	d	d	d	d	d	-	-	-	test d→CCR; 1 →bit7 of d	N and Z set to reflect d, bit7 of d set to 1
TRAP		#n	-----	-	-	-	-	-	-	-	-	-	-	-	s	PC→-(SSP);SR→-(SSP);	Push PC and SR, PC set by vector table #n
																(vector table entry) → PC	(#n range: 0 to 15)
TRAPV			-----	-	-	-	-	-	-	-	-	-	-	-	-	If V then TRAP #7	If overflow, execute an Overflow TRAP
TST	BWL	d	-**00	d	-	d	d	d	d	d	d	d	-	-	-	test d → CCR	N and Z set to reflect destination
UNLK		An	-----	-	d	-	-	-	-	-	-	-	-	-	-	An → SP; (SP)+ → An	Remove local workspace from stack
	BWL	s,d	XNZVC	Dn	An	(An)	(An)+	-(An)	(i,An)	(i,An,Rn)	abs.W	abs.L	(i,PC)	(i,PC,Rn)	#n		

Condition Tests (+ OR, ! NOT, ⊕ XOR, * Unsigned, ² Alternate cc)					
cc	Condition	Test	cc	Condition	Test
T	true	1	VC	overflow clear	!V
F	false	0	VS	overflow set	V
HI*	higher than	!(C + Z)	PL	plus	!N
LS*	lower or same	C + Z	MI	minus	N
HS*, CC²	higher or same	!C	GE	greater or equal	!(N ⊕ V)
LO*, CS²	lower than	C	LT	less than	(N ⊕ V)
NE	not equal	!Z	GT	greater than	![(N ⊕ V) + Z]
EQ	equal	Z	LE	less or equal	(N ⊕ V) + Z

Revised by Peter Csaszar, Lawrence Tech University – 2004-2006

An Address register (16/32-bit, n=0-7)
Dn Data register (8/16/32-bit, n=0-7)
Rn any data or address register
s Source, **d** Destination
e Either source or destination
#n Immediate data, **i** Displacement
BCD Binary Coded Decimal
↑ Effective address
1 Long only; all others are byte only
2 Assembler calculates offset
3 Branch sizes: **.B** or **.S** -128 to +127 bytes, **.W** or **.L** -32768 to +32767 bytes
4 Assembler automatically uses A, I, Q or M form if possible. Use #n.L to prevent Quick optimization

SSP Supervisor Stack Pointer (32-bit)
USP User Stack Pointer (32-bit)
SP Active Stack Pointer (same as A7)
PC Program Counter (24-bit)

SR Status Register (16-bit)
CCR Condition Code Register (lower 8-bits of SR)
N negative, **Z** zero, **V** overflow, **C** carry, **X** extend
***** set according to operation's result, ≡ set directly
- not affected, **0** cleared, **1** set, **U** undefined