Document No : UniKL MFI_SD_AC41
Revision No: 02
Effective Date: 01 December 2008

CONFIDENTIAL

SET B

UNIVERSITI KUALA LUMPUR
Malaysia France Institute

FINAL EXAMINATION
JANUARY 2010 SESSION

SUBJECT CODE	:	FRD 20103
SUBJECT TITLE	:	THERMODYNAMIC
LEVEL	:	DIPLOMA
TIME / DURATION	:	9.00am – 12.00pm (3 HOURS)
DATE	:	04 MAY 2010

INSTRUCTIONS TO CANDIDATES

1. Please read the instructions given in the question paper CAREFULLY.
2. This question paper is printed on both sides of the paper.
3. Please write your answer on the answer booklet provided.
4. Answer should be written in blue or black ink except for sketching, graphic and illustration.
5. This questions paper consists of TWO (2) sections. Section A and B. Answer ALL questions in Section A. For section B, answer TWO (2) questions only.
6. Answer all questions in English.

THERE ARE 5 PAGES OF QUESTIONS, EXCLUDING THIS PAGE.

SECTION A (Total 60 marks)

INSTRUCTION: Answer ALL questions.

Please use the answer booklet provided.

Question 1

1)Define the following terms:

a) Thermodynamic & Heat Transfer
b) Isothermal process
c) Isobaric process
d) Isochoric process

(8 marks)

2). Consider a nuclear power plant that produces 1000MW of power and has a conversion efficiency of 30 percent(that is, for each unit of fuel energy used, the plant produces 0.3 unit of electrical energy). Assuming continuous operation, determine the amount of nuclear fuel consumed by this plant per year? (1 kg of uranium-235 release 6.73 x 10 power 10 KJ/kg).

(6 marks)

3)Most of the energy generated in the engine of a car is rejected to the air by the radiator through the circulating water. Should the radiator be analyzed as a closed system or as an open system? Explain.

(6 marks)

Question 2

A refrigerator uses refrigerant-134a as the working fluid and operates on an ideal vapor-compression refrigeration cycle between 0.12 (evaporating pressure) and 0.8 MPa (condensing pressure). An isentropic turbine is used for the expansion/throttling process as shown in Figure 2. No capillary tube is used in this process. The mass flow rate of the refrigerant is 0.05 kg/s. Answer these questions:

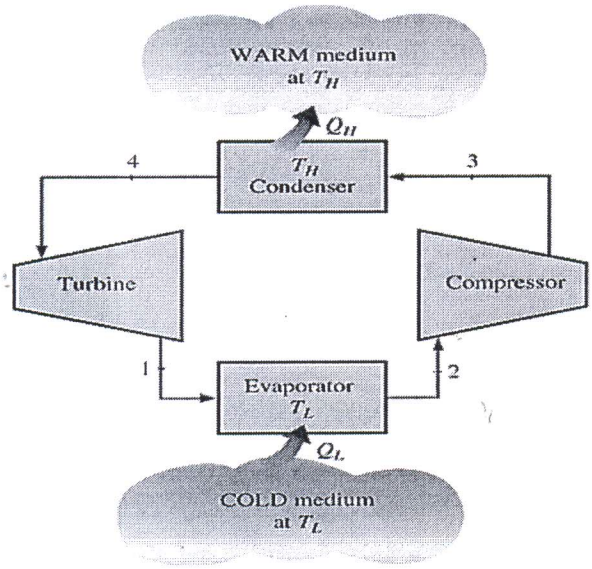

Figure 2 Schematic of a refrigerator

(a). Sketch the cycle on a *T* - *s* diagram.

(5 marks)

(b). Calculate the rate of heat removal from the refrigerated space (Q_L) in kW.

(5 marks)

(c). Calculate power input to the compressor (W_{in}) in kW.

(5 marks)

(d). Calculate coefficient of performance (COP).

(5 marks)

Question 3

Air enters an evaporative cooler at 1 atm, 36°C, and 20 % relative humidity at a rate of 5 m^3/min, and it leaves with a relative humidity of 90 % as shown in Figure 3. By assuming that the temperature of the water supplied is equal to the outlet air temperature and the process follows constant wet bulb temperature, by using the psychrometric chart attached:

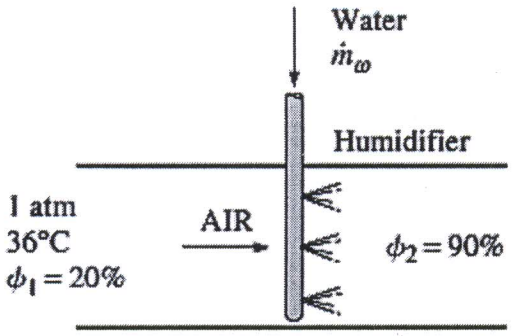

Figure 3 Schematic of a humidifier

(a). Plot the process on the psychrometric chart attached.

(4 marks)

(b). Determine $T_{wet\ bulb}$, ω and *v* at the inlet to the evaporator.

(4 marks)

(c). Determine $T_{wet\ bulb}$ and ω at the outlet of the evaporator.

(4 marks)

(d). Calculate mass flow rate of the dry air in kg/s.

(4 marks)

(e). Calculate mass flow rate of the water supplied($\dot{m}_w$) in kg/s.

(4 marks)

SECTION B (Total 40 marks)

INSTRUCTION: Answer only TWO questions

Please use the answer booklet provided.

Question 4

Refrigerant-134a enters an adiabatic compressor as saturated vapor at 120 kPa at a rate of 0.3 m^3/min and exits at 1-MPa pressure as shown in Figure 3. If the isentropic efficiency of the compressor is 80 percent, determine:

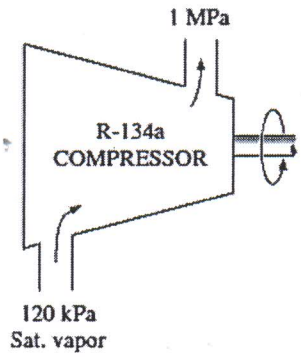

Figure 4 A compressor compress R-134a

a) $T_{2\,is}$ and $h_{2\,is}$ at exit of the compressor.

(5 marks)

b) The actual $h_{2\,act}$ and $T_{2\,act}$ at the exit of the compressor.

(5 marks)

c) Isentropic and actual work input to the compressor (W_{is} and W_{act}) in kW.

(10 marks)

Question 5

a)How does the human body respond to (i) hot weather (ii) cold weather (iii) hot and humid weather? (8 marks)

b)In Figure 5, Air enters a 40-cm-diameter cooling section at 1 atm, 32 C and 30 percent relative humidity at 18 m/s. Heat is removed from the air at a rate of 1200kJ/min. Determine:

i) the exit temperature

ii) the exit relative humidity

iii) The exit velocity

(12 marks)

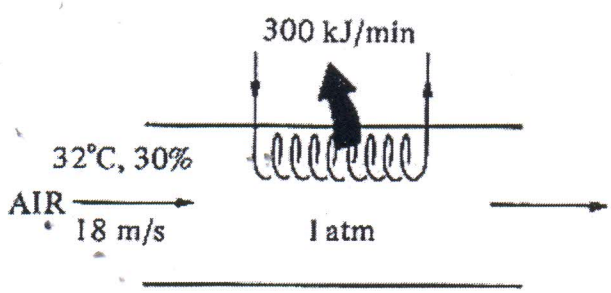

Figure 5

Question 6

Argon gas enters an adiabatic turbine at 800 °C and 1.5 MPa at a mass flow rate of 80 kg/min and exit at 200 kPa. The power output of the turbine is 370 kW and kinetic and potential energies are to be neglected. Argon is assumed to behave as an ideal gas. By taking argon's C_p = 0.5203 kJ/kg K and k = 1.667, answer these questions.

a) Calculate the outlet temperature if the compressor is isentropic. (5 marks)

b) Derive an energy balance equation for the turbine. (5 marks)

c) Calculate the actual outlet temperature. (5 marks)

d) Calculate the turbine isentropic efficiency. (5 marks)

END OF QUESTION

Appendix

Saturated refrigerant-134a—Temperature table

		Specific volume, m^3/kg		Internal energy, kJ/kg			Enthalpy, kJ/kg			Entropy, kJ/kg · K		
Temp., T °C	Sat. press., P_{sat} kPa	Sat. liquid, v_f	Sat. vapor, v_g	Sat. liquid, u_f	Evap., u_{fg}	Sat. vapor, u_g	Sat. liquid, h_f	Evap., h_{fg}	Sat. vapor, h_g	Sat. liquid, s_f	Evap., s_{fg}	Sat. vapor, s_g
−40	51.25	0.0007054	0.36081	−0.036	207.40	207.37	0.000	225.86	225.86	0.00000	0.96866	0.96866
−38	56.86	0.0007083	0.32732	2.475	206.04	208.51	2.515	224.61	227.12	0.01072	0.95511	0.96584
−36	62.95	0.0007112	0.29751	4.992	204.67	209.66	5.037	223.35	228.39	0.02138	0.94176	0.96315
−34	69.56	0.0007142	0.27090	7.517	203.29	210.81	7.566	222.09	229.65	0.03199	0.92859	0.96058
−32	76.71	0.0007172	0.24711	10.05	201.91	211.96	10.10	220.81	230.91	0.04253	0.91560	0.95813
−30	84.43	0.0007203	0.22580	12.59	200.52	213.11	12.65	219.52	232.17	0.05301	0.90278	0.95579
−28	92.76	0.0007234	0.20666	15.13	199.12	214.25	15.20	218.22	233.43	0.06344	0.89012	0.95356
−26	101.73	0.0007265	0.18946	17.69	197.72	215.40	17.76	216.92	234.68	0.07382	0.87762	0.95144
−24	111.37	0.0007297	0.17395	20.25	196.30	216.55	20.33	215.59	235.92	0.08414	0.86527	0.94941
−22	121.72	0.0007329	0.15995	22.82	194.88	217.70	22.91	214.26	s237.17	0.09441	0.85307	0.94748
−20	132.82	0.0007362	0.14729	25.39	193.45	218.84	25.49	212.91	238.41	0.10463	0.84101	0.94564
−18	144.69	0.0007396	0.13583	27.98	192.01	219.98	28.09	211.55	239.64	0.11481	0.82908	0.94389
−16	157.38	0.0007430	0.12542	30.57	190.56	221.13	30.69	210.18	240.87	0.12493	0.81729	0.94222
−14	170.93	0.0007464	0.11597	33.17	189.09	222.27	33.30	208.79	242.09	0.13501	0.80561	0.94063
−12	185.37	0.0007499	0.10736	35.78	187.62	223.40	35.92	207.38	243.30	0.14504	0.79406	0.93911
−10	200.74	0.0007535	0.099516	38.40	186.14	224.54	38.55	205.96	244.51	0.15504	0.78263	0.93766
−8	217.08	0.0007571	0.092352	41.03	184.64	225.67	41.19	204.52	245.72	0.16498	0.77130	0.93629
−6	234.44	0.0007608	0.085802	43.66	183.13	226.80	43.84	203.07	246.91	0.17489	0.76008	0.93497
−4	252.85	0.0007646	0.079804	46.31	181.61	227.92	46.50	201.60	248.10	0.18476	0.74896	0.93372
−2	272.36	0.0007684	0.074304	48.96	180.08	229.04	49.17	200.11	249.28	0.19459	0.73794	0.93253
0	293.01	0.0007723	0.069255	51.63	178.53	230.16	51.86	198.60	250.45	0.20439	0.72701	0.93139
2	314.84	0.0007763	0.064612	54.30	176.97	231.27	54.55	197.07	251.61	0.21415	0.71616	0.93031
4	337.90	0.0007804	0.060338	56.99	175.39	232.38	57.25	195.51	252.77	0.22387	0.70540	0.92927
6	362.23	0.0007845	0.056398	59.68	173.80	233.48	59.97	193.94	253.91	0.23356	0.69471	0.92828
8	387.88	0.0007887	0.052762	62.39	172.19	234.58	62.69	192.35	255.04	0.24323	0.68410	0.92733
10	414.89	0.0007930	0.049403	65.10	170.56	235.67	65.43	190.73	256.16	0.25286	0.67356	0.92641
12	443.31	0.0007975	0.046295	67.83	168.92	236.75	68.18	189.09	257.27	0.26246	0.66308	0.92554
14	473.19	0.0008020	0.043417	70.57	167.26	237.83	70.95	187.42	258.37	0.27204	0.65266	0.92470
16	504.58	0.0008066	0.040748	73.32	165.58	238.90	73.73	185.73	259.46	0.28159	0.64230	0.92389
18	537.52	0.0008113	0.038271	76.08	163.88	239.96	76.52	184.01	260.53	0.29112	0.63198	0.92310

Saturated refrigerant-134a—Temperature table (*Continued*)

		Specific volume, m^3/kg		*Internal energy,* kJ/kg			*Enthalpy,* kJ/kg			*Entropy,* kJ/kg · K		
Temp., T °C	Sat. press., P_{sat} kPa	Sat. liquid, v_f	Sat. vapor, v_g	Sat. liquid, u_f	Evap., u_{fg}	Sat. vapor, u_g	Sat. liquid, h_f	Evap., h_{fg}	Sat. vapor, h_g	Sat. liquid, s_f	Evap., s_{fg}	Sat. vapor, s_g
20	572.07	0.0008161	0.035969	78.86	162.16	241.02	79.32	182.27	261.59	0.30063	0.62172	0.92234
22	608.27	0.0008210	0.033828	81.64	160.42	242.06	82.14	180.49	262.64	0.31011	0.61149	0.92160
24	646.18	0.0008261	0.031834	84.44	158.65	243.10	84.98	178.69	263.67	0.31958	0.60130	0.92088
26	685.84	0.0008313	0.029976	87.26	156.87	244.12	87.83	176.85	264.68	0.32903	0.59115	0.92018
28	727.31	0.0008366	0.028242	90.09	155.05	245.14	90.69	174.99	265.68	0.33846	0.58102	0.91948
30	770.64	0.0008421	0.026622	92.93	153.22	246.14	93.58	173.08	266.66	0.34789	0.57091	0.91879
32	815.89	0.0008478	0.025108	95.79	151.35	247.14	96.48	171.14	267.62	0.35730	0.56082	0.91811
34	863.11	0.0008536	0.023691	98.66	149.46	248.12	99.40	169.17	268.57	0.36670	0.55074	0.91743
36	912.35	0.0008595	0.022364	101.55	147.54	249.08	102.33	167.16	269.49	0.37609	0.54066	0.91675
38	963.68	0.0008657	0.021119	104.45	145.58	250.04	105.29	165.10	270.39	0.38548	0.53058	0.91606
40	1017.1	0.0008720	0.019952	107.38	143.60	250.97	108.26	163.00	271.27	0.39486	0.52049	0.91536
42	1072.8	0.0008786	0.018855	110.32	141.58	251.89	111.26	160.86	272.12	0.40425	0.51039	0.91464
44	1130.7	0.0008854	0.017824	113.28	139.52	252.80	114.28	158.67	272.95	0.41363	0.50027	0.91391
46	1191.0	0.0008924	0.016853	116.26	137.42	253.68	117.32	156.43	273.75	0.42302	0.49012	0.91315
48	1253.6	0.0008996	0.015939	119.26	135.29	254.55	120.39	154.14	274.53	0.43242	0.47993	0.91236
52	1386.2	0.0009150	0.014265	125.33	130.88	256.21	126.59	149.39	275.98	0.45126	0.45941	0.91067
56	1529.1	0.0009317	0.012771	131.49	126.28	257.77	132.91	144.38	277.30	0.47018	0.43863	0.90880
60	1682.8	0.0009498	0.011434	137.76	121.46	259.22	139.36	139.10	278.46	0.48920	0.41749	0.90669
65	1891.0	0.0009750	0.009950	145.77	115.05	260.82	147.62	132.02	279.64	0.51320	0.39039	0.90359
70	2118.2	0.0010037	0.008642	154.01	108.14	262.15	156.13	124.32	280.46	0.53755	0.36227	0.89982
75	2365.8	0.0010372	0.007480	162.53	100.60	263.13	164.98	115.85	280.82	0.56241	0.33272	0.89512
80	2635.3	0.0010772	0.006436	171.40	92.23	263.63	174.24	106.35	280.59	0.58800	0.30111	0.88912
85	2928.2	0.0011270	0.005486	180.77	82.67	263.44	184.07	95.44	279.51	0.61473	0.26644	0.88117
90	3246.9	0.0011932	0.004599	190.89	71.29	262.18	194.76	82.35	277.11	0.64336	0.22674	0.87010
95	3594.1	0.0012933	0.003726	202.40	56.47	258.87	207.05	65.21	272.26	0.67578	0.17711	0.85289
100	3975.1	0.0015269	0.002630	218.72	29.19	247.91	224.79	33.58	258.37	0.72217	0.08999	0.81215

Saturated refrigerant-134a—Pressure table

		Specific volume, m³/kg		Internal energy, kJ/kg			Enthalpy, kJ/kg			Entropy, kJ/kg · K		
Press., P kPa	Sat. temp., T_{sat} °C	Sat. liquid, v_f	Sat. vapor, v_g	Sat. liquid, u_f	Evap., u_{fg}	Sat. vapor, u_g	Sat. liquid, h_f	Evap., h_{fg}	Sat. vapor, h_g	Sat. liquid, s_f	Evap., s_{fg}	Sat. vapor, s_g
60	−36.95	0.0007098	0.31121	3.798	205.32	209.12	3.841	223.95	227.79	0.01634	0.94807	0.96441
70	−33.87	0.0007144	0.26929	7.680	203.20	210.88	7.730	222.00	229.73	0.03267	0.92775	0.96042
80	−31.13	0.0007185	0.23753	11.15	201.30	212.46	11.21	220.25	231.46	0.04711	0.90999	0.95710
90	−28.65	0.0007223	0.21263	14.31	199.57	213.88	14.37	218.65	233.02	0.06008	0.89419	0.95427
100	−26.37	0.0007259	0.19254	17.21	197.98	215.19	17.28	217.16	234.44	0.07188	0.87995	0.95183
120	−22.32	0.0007324	0.16212	22.40	195.11	217.51	22.49	214.48	236.97	0.09275	0.85503	0.94779
140	−18.77	0.0007383	0.14014	26.98	192.57	219.54	27.08	212.08	239.16	0.11087	0.83368	0.94456
160	−15.60	0.0007437	0.12348	31.09	190.27	221.35	31.21	209.90	241.11	0.12693	0.81496	0.94190
180	−12.73	0.0007487	0.11041	34.83	188.16	222.99	34.97	207.90	242.86	0.14139	0.79826	0.93965
200	−10.09	0.0007533	0.099867	38.28	186.21	224.48	38.43	206.03	244.46	0.15457	0.78316	0.93773
240	−5.38	0.0007620	0.083897	44.48	182.67	227.14	44.66	202.62	247.28	0.17794	0.75664	0.93458
280	−1.25	0.0007699	0.072352	49.97	179.50	229.46	50.18	199.54	249.72	0.19829	0.73381	0.93210
320	2.46	0.0007772	0.063604	54.92	176.61	231.52	55.16	196.71	251.88	0.21637	0.71369	0.93006
360	5.82	0.0007841	0.056738	59.44	173.94	233.38	59.72	194.08	253.81	0.23270	0.69566	0.92836
400	8.91	0.0007907	0.051201	63.62	171.45	235.07	63.94	191.62	255.55	0.24761	0.67929	0.92691
450	12.46	0.0007985	0.045619	68.45	168.54	237.00	68.81	188.71	257.53	0.26465	0.66069	0.92535
500	15.71	0.0008059	0.041118	72.93	165.82	238.75	73.33	185.98	259.30	0.28023	0.64377	0.92400
550	18.73	0.0008130	0.037408	77.10	163.25	240.35	77.54	183.38	260.92	0.29461	0.62821	0.92282
600	21.55	0.0008199	0.034295	81.02	160.81	241.83	81.51	180.90	262.40	0.30799	0.61378	0.92177
650	24.20	0.0008266	0.031646	84.72	158.48	243.20	85.26	178.51	263.77	0.32051	0.60030	0.92081
700	26.69	0.0008331	0.029361	88.24	156.24	244.48	88.82	176.21	265.03	0.33230	0.58763	0.91994
750	29.06	0.0008395	0.027371	91.59	154.08	245.67	92.22	173.98	266.20	0.34345	0.57567	0.91912
800	31.31	0.0008458	0.025621	94.79	152.00	246.79	95.47	171.82	267.29	0.35404	0.56431	0.91835
850	33.45	0.0008520	0.024069	97.87	149.98	247.85	98.60	169.71	268.31	0.36413	0.55349	0.91762
900	35.51	0.0008580	0.022683	100.83	148.01	248.85	101.61	167.66	269.26	0.37377	0.54315	0.91692
950	37.48	0.0008641	0.021438	103.69	146.10	249.79	104.51	165.64	270.15	0.38301	0.53323	0.91624
1000	39.37	0.0008700	0.020313	106.45	144.23	250.68	107.32	163.67	270.99	0.39189	0.52368	0.91558
1200	46.29	0.0008934	0.016715	116.70	137.11	253.81	117.77	156.10	273.87	0.42441	0.48863	0.91303
1400	52.40	0.0009166	0.014107	125.94	130.43	256.37	127.22	148.90	276.12	0.45315	0.45734	0.91050
1600	57.88	0.0009400	0.012123	134.43	124.04	258.47	135.93	141.93	277.86	0.47911	0.42873	0.90784
1800	62.87	0.0009639	0.010559	142.33	117.83	260.17	144.07	135.11	279.17	0.50294	0.40204	0.90498
2000	67.45	0.0009886	0.009288	149.78	111.73	261.51	151.76	128.33	280.09	0.52509	0.37675	0.90184
2500	77.54	0.0010566	0.006936	166.99	96.47	263.45	169.63	111.16	280.79	0.57531	0.31695	0.89226
3000	86.16	0.0011406	0.005275	183.04	80.22	263.26	186.46	92.63	279.09	0.62118	0.25776	0.87894

Superheated refrigerant-134a

T °C	v m³/kg	u kJ/kg	h kJ/kg	s kJ/kg · K	v m³/kg	u kJ/kg	h kJ/kg	s kJ/kg · K	v m³/kg	u kJ/kg	h kJ/kg	s kJ/kg · K
	P = 0.06 MPa (T_{sat} = −36.95°C)				P = 0.10 MPa (T_{sat} = −26.37°C)				P = 0.14 MPa (T_{sat} = −18.77°C)			
Sat.	0.31121	209.12	227.79	0.9644	0.19254	215.19	234.44	0.9518	0.14014	219.54	239.16	0.9446
−20	0.33608	220.60	240.76	1.0174	0.19841	219.66	239.50	0.9721				
−10	0.35048	227.55	248.58	1.0477	0.20743	226.75	247.49	1.0030	0.14605	225.91	246.36	0.9724
0	0.36476	234.66	256.54	1.0774	0.21630	233.95	255.58	1.0332	0.15263	233.23	254.60	1.0031
10	0.37893	241.92	264.66	1.1066	0.22506	241.30	263.81	1.0628	0.15908	240.66	262.93	1.0331
20	0.39302	249.35	272.94	1.1353	0.23373	248.79	272.17	1.0918	0.16544	248.22	271.38	1.0624
30	0.40705	256.95	281.37	1.1636	0.24233	256.44	280.68	1.1203	0.17172	255.93	279.97	1.0912
40	0.42102	264.71	289.97	1.1915	0.25088	264.25	289.34	1.1484	0.17794	263.79	288.70	1.1195
50	0.43495	272.64	298.74	1.2191	0.25937	272.22	298.16	1.1762	0.18412	271.79	297.57	1.1474
60	0.44883	280.73	307.66	1.2463	0.26783	280.35	307.13	1.2035	0.19025	279.96	306.59	1.1749
70	0.46269	288.99	316.75	1.2732	0.27626	288.64	316.26	1.2305	0.19635	288.28	315.77	1.2020
80	0.47651	297.41	326.00	1.2997	0.28465	297.08	325.55	1.2572	0.20242	296.75	325.09	1.2288
90	0.49032	306.00	335.42	1.3260	0.29303	305.69	334.99	1.2836	0.20847	305.38	334.57	1.2553
100	0.50410	314.74	344.99	1.3520	0.30138	314.46	344.60	1.3096	0.21449	314.17	344.20	1.2814
	P = 0.18 MPa (T_{sat} = −12.73°C)				P = 0.20 MPa (T_{sat} = −10.09°C)				P = 0.24 MPa (T_{sat} = −5.38°C)			
Sat.	0.11041	222.99	242.86	0.9397	0.09987	224.48	244.46	0.9377	0.08390	227.14	247.28	0.9346
−10	0.11189	225.02	245.16	0.9484	0.09991	224.55	244.54	0.9380				
0	0.11722	232.48	253.58	0.9798	0.10481	232.09	253.05	0.9698	0.08617	231.29	251.97	0.9519
10	0.12240	240.00	262.04	1.0102	0.10955	239.67	261.58	1.0004	0.09026	238.98	260.65	0.9831
20	0.12748	247.64	270.59	1.0399	0.11418	247.35	270.18	1.0303	0.09423	246.74	269.36	1.0134
30	0.13248	255.41	279.25	1.0690	0.11874	255.14	278.89	1.0595	0.09812	254.61	278.16	1.0429
40	0.13741	263.31	288.05	1.0975	0.12322	263.08	287.72	1.0882	0.10193	262.59	287.06	1.0718
50	0.14230	271.36	296.98	1.1256	0.12766	271.15	296.68	1.1163	0.10570	270.71	296.08	1.1001
60	0.14715	279.56	306.05	1.1532	0.13206	279.37	305.78	1.1441	0.10942	278.97	305.23	1.1280
70	0.15196	287.91	315.27	1.1805	0.13641	287.73	315.01	1.1714	0.11310	287.36	314.51	1.1554
80	0.15673	296.42	324.63	1.2074	0.14074	296.25	324.40	1.1983	0.11675	295.91	323.93	1.1825
90	0.16149	305.07	334.14	1.2339	0.14504	304.92	333.93	1.2249	0.12038	304.60	333.49	1.2092
100	0.16622	313.88	343.80	1.2602	0.14933	313.74	343.60	1.2512	0.12398	313.44	343.20	1.2356
	P = 0.28 MPa (T_{sat} = −1.25°C)				P = 0.32 MPa (T_{sat} = 2.46°C)				P = 0.40 MPa (T_{sat} = 8.91°C)			
Sat.	0.07235	229.46	249.72	0.9321	0.06360	231.52	251.88	0.9301	0.051201	235.07	255.55	0.9269
0	0.07282	230.44	250.83	0.9362								
10	0.07646	238.27	259.68	0.9680	0.06609	237.54	258.69	0.9544	0.051506	235.97	256.58	0.9305
20	0.07997	246.13	268.52	0.9987	0.06925	245.50	267.66	0.9856	0.054213	244.18	265.86	0.9628
30	0.08338	254.06	277.41	1.0285	0.07231	253.50	276.65	1.0157	0.056796	252.36	275.07	0.9937
40	0.08672	262.10	286.38	1.0576	0.07530	261.60	285.70	1.0451	0.059292	260.58	284.30	1.0236
50	0.09000	270.27	295.47	1.0862	0.07823	269.82	294.85	1.0739	0.061724	268.90	293.59	1.0528
60	0.09324	278.56	304.67	1.1142	0.08111	278.15	304.11	1.1021	0.064104	277.32	302.96	1.0814
70	0.09644	286.99	314.00	1.1418	0.08395	286.62	313.48	1.1298	0.066443	285.86	312.44	1.1094
80	0.09961	295.57	323.46	1.1690	0.08675	295.22	322.98	1.1571	0.068747	294.53	322.02	1.1369
90	0.10275	304.29	333.06	1.1958	0.08953	303.97	332.62	1.1840	0.071023	303.32	331.73	1.1640
100	0.10587	313.15	342.80	1.2222	0.09229	312.86	342.39	1.2105	0.073274	312.26	341.57	1.1907
110	0.10897	322.16	352.68	1.2483	0.09503	321.89	352.30	1.2367	0.075504	321.33	351.53	1.2171
120	0.11205	331.32	362.70	1.2742	0.09775	331.07	362.35	1.2626	0.077717	330.55	361.63	1.2431
130	0.11512	340.63	372.87	1.2997	0.10045	340.39	372.54	1.2882	0.079913	339.90	371.87	1.2688
140	0.11818	350.09	383.18	1.3250	0.10314	349.86	382.87	1.3135	0.082096	349.41	382.24	1.2942

Superheated refrigerant-134a (*Continued*)

T °C	v m³/kg	u kJ/kg	h kJ/kg	s kJ/kg · K	v m³/kg	u kJ/kg	h kJ/kg	s kJ/kg · K	v m³/kg	u kJ/kg	h kJ/kg	s kJ/kg · K
	P = 0.50 MPa (T_{sat} = 15.71°C)				P = 0.60 MPa (T_{sat} = 21.55°C)				P = 0.70 MPa (T_{sat} = 26.69°C)			
Sat.	0.041118	238.75	259.30	0.9240	0.034295	241.83	262.40	0.9218	0.029361	244.48	265.03	0.9199
20	0.042115	242.40	263.46	0.9383								
30	0.044338	250.84	273.01	0.9703	0.035984	249.22	270.81	0.9499	0.029966	247.48	268.45	0.9313
40	0.046456	259.26	282.48	1.0011	0.037865	257.86	280.58	0.9816	0.031696	256.39	278.57	0.9641
50	0.048499	267.72	291.96	1.0309	0.039659	266.48	290.28	1.0121	0.033322	265.20	288.53	0.9954
60	0.050485	276.25	301.50	1.0599	0.041389	275.15	299.98	1.0417	0.034875	274.01	298.42	1.0256
70	0.052427	284.89	311.10	1.0883	0.043069	283.89	309.73	1.0705	0.036373	282.87	308.33	1.0549
80	0.054331	293.64	320.80	1.1162	0.044710	292.73	319.55	1.0987	0.037829	291.80	318.28	1.0835
90	0.056205	302.51	330.61	1.1436	0.046318	301.67	329.46	1.1264	0.039250	300.82	328.29	1.1114
100	0.058053	311.50	340.53	1.1705	0.047900	310.73	339.47	1.1536	0.040642	309.95	338.40	1.1389
110	0.059880	320.63	350.57	1.1971	0.049458	319.91	349.59	1.1803	0.042010	319.19	348.60	1.1658
120	0.061687	329.89	360.73	1.2233	0.050997	329.23	359.82	1.2067	0.043358	328.55	358.90	1.1924
130	0.063479	339.29	371.03	1.2491	0.052519	338.67	370.18	1.2327	0.044688	338.04	369.32	1.2186
140	0.065256	348.83	381.46	1.2747	0.054027	348.25	380.66	1.2584	0.046004	347.66	379.86	1.2444
150	0.067021	358.51	392.02	1.2999	0.055522	357.96	391.27	1.2838	0.047306	357.41	390.52	1.2699
160	0.068775	368.33	402.72	1.3249	0.057006	367.81	402.01	1.3088	0.048597	367.29	401.31	1.2951
	P = 0.80 MPa (T_{sat} = 31.31°C)				P = 0.90 MPa (T_{sat} = 35.51°C)				P = 1.00 MPa (T_{sat} = 39.37°C)			
Sat.	0.025621	246.79	267.29	0.9183	0.022683	248.85	269.26	0.9169	0.020313	250.68	270.99	0.9156
40	0.027035	254.82	276.45	0.9480	0.023375	253.13	274.17	0.9327	0.020406	251.30	271.71	0.9179
50	0.028547	263.86	286.69	0.9802	0.024809	262.44	284.77	0.9660	0.021796	260.94	282.74	0.9525
60	0.029973	272.83	296.81	1.0110	0.026146	271.60	295.13	0.9976	0.023068	270.32	293.38	0.9850
70	0.031340	281.81	306.88	1.0408	0.027413	280.72	305.39	1.0280	0.024261	279.59	303.85	1.0160
80	0.032659	290.84	316.97	1.0698	0.028630	289.86	315.63	1.0574	0.025398	288.86	314.25	1.0458
90	0.033941	299.95	327.10	1.0981	0.029806	299.06	325.89	1.0860	0.026492	298.15	324.64	1.0748
100	0.035193	309.15	337.30	1.1258	0.030951	308.34	336.19	1.1140	0.027552	307.51	335.06	1.1031
110	0.036420	318.45	347.59	1.1530	0.032068	317.70	346.56	1.1414	0.028584	316.94	345.53	1.1308
120	0.037625	327.87	357.97	1.1798	0.033164	327.18	357.02	1.1684	0.029592	326.47	356.06	1.1580
130	0.038813	337.40	368.45	1.2061	0.034241	336.76	367.58	1.1949	0.030581	336.11	366.69	1.1846
140	0.039985	347.06	379.05	1.2321	0.035302	346.46	378.23	1.2210	0.031554	345.85	377.40	1.2109
150	0.041143	356.85	389.76	1.2577	0.036349	356.28	389.00	1.2467	0.032512	355.71	388.22	1.2368
160	0.042290	366.76	400.59	1.2830	0.037384	366.23	399.88	1.2721	0.033457	365.70	399.15	1.2623
170	0.043427	376.81	411.55	1.3080	0.038408	376.31	410.88	1.2972	0.034392	375.81	410.20	1.2875
180	0.044554	386.99	422.64	1.3327	0.039423	386.52	422.00	1.3221	0.035317	386.04	421.36	1.3124
	P = 1.20 MPa (T_{sat} = 46.29°C)				P = 1.40 MPa (T_{sat} = 52.40°C)				P = 1.60 MPa (T_{sat} = 57.88°C)			
Sat.	0.016715	253.81	273.87	0.9130	0.014107	256.37	276.12	0.9105	0.012123	258.47	277.86	0.9078
50	0.017201	257.63	278.27	0.9267								
60	0.018404	267.56	289.64	0.9614	0.015005	264.46	285.47	0.9389	0.012372	260.89	280.69	0.9163
70	0.019502	277.21	300.61	0.9938	0.016060	274.62	297.10	0.9733	0.013430	271.76	293.25	0.9535
80	0.020529	286.75	311.39	1.0248	0.017023	284.51	308.34	1.0056	0.014362	282.09	305.07	0.9875
90	0.021506	296.26	322.07	1.0546	0.017923	294.28	319.37	1.0364	0.015215	292.17	316.52	1.0194
100	0.022442	305.80	332.73	1.0836	0.018778	304.01	330.30	1.0661	0.016014	302.14	327.76	1.0500
110	0.023348	315.38	343.40	1.1118	0.019597	313.76	341.19	1.0949	0.016773	312.07	338.91	1.0795
120	0.024228	325.03	354.11	1.1394	0.020388	323.55	352.09	1.1230	0.017500	322.02	350.02	1.1081
130	0.025086	334.77	364.88	1.1664	0.021155	333.41	363.02	1.1504	0.018201	332.00	361.12	1.1360
140	0.025927	344.61	375.72	1.1930	0.021904	343.34	374.01	1.1773	0.018882	342.05	372.26	1.1632
150	0.026753	354.56	386.66	1.2192	0.022636	353.37	385.07	1.2038	0.019545	352.17	383.44	1.1900
160	0.027566	364.61	397.69	1.2449	0.023355	363.51	396.20	1.2298	0.020194	362.38	394.69	1.2163
170	0.028367	374.78	408.82	1.2703	0.024061	373.75	407.43	1.2554	0.020830	372.69	406.02	1.2421
180	0.029158	385.08	420.07	1.2954	0.024757	384.10	418.76	1.2807	0.021456	383.11	417.44	1.2676

Ideal-gas properties of air

T K	h kJ/kg	P_r	u kJ/kg	v_r	s^o kJ/kg · K
200	199.97	0.3363	142.56	1707.0	1.29559
210	209.97	0.3987	149.69	1512.0	1.34444
220	219.97	0.4690	156.82	1346.0	1.39105
230	230.02	0.5477	164.00	1205.0	1.43557
240	240.02	0.6355	171.13	1084.0	1.47824
250	250.05	0.7329	178.28	979.0	1.51917
260	260.09	0.8405	185.45	887.8	1.55848
270	270.11	0.9590	192.60	808.0	1.59634
280	280.13	1.0889	199.75	738.0	1.63279
285	285.14	1.1584	203.33	706.1	1.65055
290	290.16	1.2311	206.91	676.1	1.66802
295	295.17	1.3068	210.49	647.9	1.68515
298	298.18	1.3543	212.64	631.9	1.69528
300	300.19	1.3860	214.07	621.2	1.70203
305	305.22	1.4686	217.67	596.0	1.71865
310	310.24	1.5546	221.25	572.3	1.73498
315	315.27	1.6442	224.85	549.8	1.75106
320	320.29	1.7375	228.42	528.6	1.76690
325	325.31	1.8345	232.02	508.4	1.78249
330	330.34	1.9352	235.61	489.4	1.79783
340	340.42	2.149	242.82	454.1	1.82790
350	350.49	2.379	250.02	422.2	1.85708
360	360.58	2.626	257.24	393.4	1.88543
370	370.67	2.892	264.46	367.2	1.91313
380	380.77	3.176	271.69	343.4	1.94001
390	390.88	3.481	278.93	321.5	1.96633
400	400.98	3.806	286.16	301.6	1.99194
410	411.12	4.153	293.43	283.3	2.01699
420	421.26	4.522	300.69	266.6	2.04142
430	431.43	4.915	307.99	251.1	2.06533
440	441.61	5.332	315.30	236.8	2.08870
450	451.80	5.775	322.62	223.6	2.11161
460	462.02	6.245	329.97	211.4	2.13407
470	472.24	6.742	337.32	200.1	2.15604
480	482.49	7.268	344.70	189.5	2.17760
490	492.74	7.824	352.08	179.7	2.19876
500	503.02	8.411	359.49	170.6	2.21952
510	513.32	9.031	366.92	162.1	2.23993
520	523.63	9.684	374.36	154.1	2.25997
530	533.98	10.37	381.84	146.7	2.27967
540	544.35	11.10	389.34	139.7	2.29906
550	555.74	11.86	396.86	133.1	2.31809
560	565.17	12.66	404.42	127.0	2.33685
570	575.59	13.50	411.97	121.2	2.35531
580	586.04	14.38	419.55	115.7	2.37348
590	596.52	15.31	427.15	110.6	2.39140
600	607.02	16.28	434.78	105.8	2.40902
610	617.53	17.30	442.42	101.2	2.42644
620	628.07	18.36	450.09	96.92	2.44356
630	638.63	19.84	457.78	92.84	2.46048
640	649.22	20.64	465.50	88.99	2.47716
650	659.84	21.86	473.25	85.34	2.49364
660	670.47	23.13	481.01	81.89	2.50985
670	681.14	24.46	488.81	78.61	2.52589
680	691.82	25.85	496.62	75.50	2.54175
690	702.52	27.29	504.45	72.56	2.55731
700	713.27	28.80	512.33	69.76	2.57277
710	724.04	30.38	520.23	67.07	2.58810
720	734.82	32.02	528.14	64.53	2.60319
730	745.62	33.72	536.07	62.13	2.61803
740	756.44	35.50	544.02	59.82	2.63280
750	767.29	37.35	551.99	57.63	2.64737
760	778.18	39.27	560.01	55.54	2.66176
780	800.03	43.35	576.12	51.64	2.69013
800	821.95	47.75	592.30	48.08	2.71787
820	843.98	52.59	608.59	44.84	2.74504
840	866.08	57.60	624.95	41.85	2.77170
860	888.27	63.09	641.40	39.12	2.79783
880	910.56	68.98	657.95	36.61	2.82344
900	932.93	75.29	674.58	34.31	2.84856
920	955.38	82.05	691.28	32.18	2.87324
940	977.92	89.28	708.08	30.22	2.89748
960	1000.55	97.00	725.02	28.40	2.92128
980	1023.25	105.2	741.98	26.73	2.94468
1000	1046.04	114.0	758.94	25.17	2.96770
1020	1068.89	123.4	776.10	23.72	2.99034
1040	1091.85	133.3	793.36	23.29	3.01260
1060	1114.86	143.9	810.62	21.14	3.03449
1080	1137.89	155.2	827.88	19.98	3.05608
1100	1161.07	167.1	845.33	18.896	3.07732
1120	1184.28	179.7	862.79	17.886	3.09825
1140	1207.57	193.1	880.35	16.946	3.11883
1160	1230.92	207.2	897.91	16.064	3.13916
1180	1254.34	222.2	915.57	15.241	3.15916
1200	1277.79	238.0	933.33	14.470	3.17888
1220	1301.31	254.7	951.09	13.747	3.19834
1240	1324.93	272.3	968.95	13.069	3.21751

Ideal-gas properties of air (*Concluded*)

T K	h kJ/kg	P_r	u kJ/kg	v_r	s^o kJ/kg · K	T K	h kJ/kg	P_r	u kJ/kg	v_r	s^o kJ/kg · K
1260	1348.55	290.8	986.90	12.435	3.23638	1600	1757.57	791.2	1298.30	5.804	3.5236
1280	1372.24	310.4	1004.76	11.835	3.25510	1620	1782.00	834.1	1316.96	5.574	3.5387
1300	1395.97	330.9	1022.82	11.275	3.27345	1640	1806.46	878.9	1335.72	5.355	3.5538
1320	1419.76	352.5	1040.88	10.747	3.29160	1660	1830.96	925.6	1354.48	5.147	3.5686
1340	1443.60	375.3	1058.94	10.247	3.30959	1680	1855.50	974.2	1373.24	4.949	3.5833
1360	1467.49	399.1	1077.10	9.780	3.32724	1700	1880.1	1025	1392.7	4.761	3.5979
1380	1491.44	424.2	1095.26	9.337	3.34474	1750	1941.6	1161	1439.8	4.328	3.6336
1400	1515.42	450.5	1113.52	8.919	3.36200	1800	2003.3	1310	1487.2	3.994	3.6684
1420	1539.44	478.0	1131.77	8.526	3.37901	1850	2065.3	1475	1534.9	3.601	3.7023
1440	1563.51	506.9	1150.13	8.153	3.39586	1900	2127.4	1655	1582.6	3.295	3.7354
1460	1587.63	537.1	1168.49	7.801	3.41247	1950	2189.7	1852	1630.6	3.022	3.7677
1480	1611.79	568.8	1186.95	7.468	3.42892	2000	2252.1	2068	1678.7	2.776	3.7994
1500	1635.97	601.9	1205.41	7.152	3.44516	2050	2314.6	2303	1726.8	2.555	3.8303
1520	1660.23	636.5	1223.87	6.854	3.46120	2100	2377.7	2559	1775.3	2.356	3.8605
1540	1684.51	672.8	1242.43	6.569	3.47712	2150	2440.3	2837	1823.8	2.175	3.8901
1560	1708.82	710.5	1260.99	6.301	3.49276	2200	2503.2	3138	1872.4	2.012	3.9191
1580	1733.17	750.0	1279.65	6.046	3.50829	2250	2566.4	3464	1921.3	1.864	3.9474

Useful Formula

(1) Work Relations

$$W_b = \int p\,dV \qquad W_e = VI\Delta t \qquad W_{spring} = \frac{k_s}{2}(x_2^2 - x_1^2)$$

$$W_{rot} = 2\pi n\tau \qquad w_{cv} = -\int_1^2 v\,dp + (V_1^2 - V_2^2)/2 + g(z_1 - z_2)$$

(2) First Law Relations and Mass Conservation

$$Q - W = \Delta U + \Delta KE + \Delta PE \qquad \frac{dE}{dt} = \dot{Q} - \dot{W}$$

$$\dot{Q}_{cv} - \dot{W}_{cv} - \sum_e \dot{m}_e\left(h + V^2/2 + gz\right)_e + \sum_i \dot{m}_i\left(h + V^2/2 + gz\right)_i = \left.\frac{dE}{dt}\right|_{cv}$$

$$\dot{m} = \rho VA \qquad \sum_e \dot{m}_e = \sum_i \dot{m}_i$$

(3) Second Law Relations

$$\Delta S = \int_1^2 \left[\frac{\delta Q}{T}\right]_b + S_{gen} \qquad \Delta s = \int_1^2 \left[\frac{\delta q}{T}\right]_{int\,rev} \qquad \frac{dS}{dt} = \sum_j \frac{\dot{Q}_j}{T_j} + \dot{S}_{gen}$$

$$-\sum_e \dot{m}_e s_e + \sum_i \dot{m}_i s_i + \sum_j \frac{\dot{Q}_j}{T_j} + \dot{S}_{gen,cv} = \frac{dS_{cv}}{dt}$$

(4) Pressure, Temperature and Energy Relations

$p_{abs} = p_{atm} \pm p_{gage}$ $\quad p - p_{atm} = \rho g L$

$pV = n\overline{R}T$ $\quad pV = mRT$ $\quad R = \overline{R}/M$ $\quad pv = ZRT$

$p_R = p/p_c$ $\quad T_R = T/T_c$ $\quad v_R = v p_c / RT_c$ $\quad k = C_p/C_v$

$x = m_g/(m_f + m_g)$ $\quad y = (1-x)y_f + xy_g = y_f + xy_{fg}$ $\quad y_{fg} = y_g - y_f$

$h = u + pv$ $\quad \Delta u = \int c_v dT$ $\quad \Delta h = \int c_p dT$ $\quad c_p - c_v = R$

$\Delta u = \int c dT$ $\quad \Delta h = \Delta u + v\Delta p$ $\quad h(T,p) - h_f(T) = v_f(T)[p - p_{sat}(T)]$

(5) Entropy Relations (and isentropic processes)

$Tds = du + pdv$ $\quad Tds = dh - vdp$

$ds = c_v \dfrac{dT}{T} + R\dfrac{dv}{v}$ $\quad ds = c_p \dfrac{dT}{T} - R\dfrac{dp}{p}$

$\Delta s = s_2^o - s_1^o - R\ln(p_2/p_1)$ $\quad \Delta s = c\ln(T_2/T_1)$

$T_2/T_1 = (p_2/p_1)^{(k-1)/k} = (v_1/v_2)^{k-1}$ $\quad (p_2/p_1)_s = p_{r2}/p_{r1}$ $\quad (v_2/v_1)_s = v_{r2}/v_{r1}$

(6) Device Efficiencies and Cycle Analyses

$\eta_{turbine} = w_{act}/w_{isen}$ $\quad \eta_{comp} = \eta_{pump} = w_{isen}/w_{act}$ $\quad \eta_{nozzle} = V_{2,act}^2 / V_{2,isen}^2$

$\eta_{th} = \dfrac{W_{net,out}}{Q_H}$ $\quad COP_R = \dfrac{Q_L}{W_{net,in}}$ $\quad COP_{HP} = \dfrac{Q_H}{W_{net,in}}$

$\eta_{th,rev} = 1 - \dfrac{T_L}{T_H}$ $\quad COP_{R,rev} = \dfrac{T_L}{T_H - T_L}$ $\quad COP_{HP,rev} = \dfrac{T_H}{T_H - T_L}$ $\quad \dfrac{T_C}{T_H} = \left(\dfrac{Q_C}{Q_H}\right)_{rev}$

ASHRAE Psychrometric Chart No. 1
Normal Temperature
Barometric Pressure: 101.325 kPa

©1992 American Society of Heating,
Refrigerating and Air-Conditioning Engineers, Inc.

Sea Level