CONFIDENTIAL

UNIVERSITI KUALA LUMPUR
MALAYSIAN INSTITUTE OF MARINE ENGINEERING TECHNOLOGY

FINAL EXAMINATION
SEPTEMBER 2016 SEMESTER

COURSE CODE	:	LGB 21703
COURSE NAME	:	STATICS
PROGRAMME NAME (FOR MPU: PROGRAMME LEVEL)	:	BACHELOR OF ENGINEERING TECHNOLOGY(HONS) IN MARINE ENGINEERING
DATE	:	16 JANUARY 2017
TIME	:	09.00 AM – 12.00 PM
DURATION	:	3 HOURS

INSTRUCTIONS TO CANDIDATES

1. Please read the instructions given in the question paper CAREFULLY.
2. This question paper is printed on both sides of the paper.
3. Please write your answers on the answer booklet provided.
4. Answer should be written in blue or black ink except for sketching, graphic and illustration.
5. This question paper consists of TWO (2) sections. Section A and B. Answer all questions in Section A. For Section B, answer THREE (3) questions only.
6. Answer all questions in English.
7. Formulae sheet has been appended for your reference.

THERE ARE 5 PAGES OF QUESTIONS, INCLUDING THIS PAGE.

SECTION A (Total: 40 marks)

INSTRUCTION: Answer all questions.
Please use the answer booklet provided.

Question 1

The cable stays AB and AD support pole AC as shown in Figure 1. Knowing that the tension is 60N in AB and 20N in AD, determine the magnitude and direction of the resultant of the forces exerted at point A by using;

a) The graphically method.

(10 marks)

b) The triangle rules method.

(10 marks)

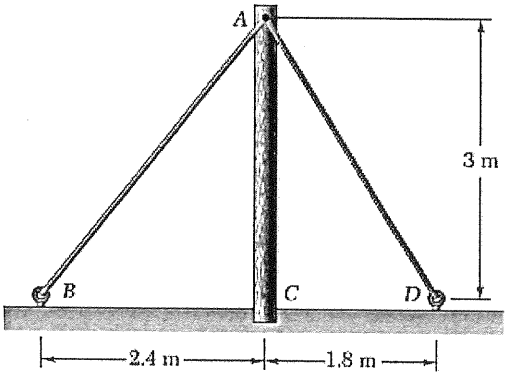

Figure 1

Question 2

The two springs are identical as shown in Figure 2, with un-stretched length 0.4m. When the 50kg mass is suspended at A, the length of each spring increased to 0.6m.

(a) What is the spring constant *k*?

(7 marks)

(b) If the spring AB replaced by the 0.5m cable length, the spring AC length increased to 0.45m. What is the spring constant *k* when the angle ABC is 47°?

(10 marks)

(c) What is the tension of AB cable?

(3 marks)

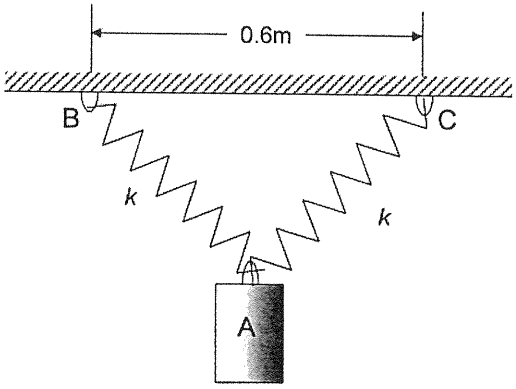

Figure 2

SECTION B (Total: 40 marks)

INSTRUCTION: Select THREE (3) Questions.
Please use the answer booklet provided.

Question 3

Figure 3 shows a building structure to be built. Using the method of joints, determine the force in each member of the truss shown. State whether each member is in tension or compression.

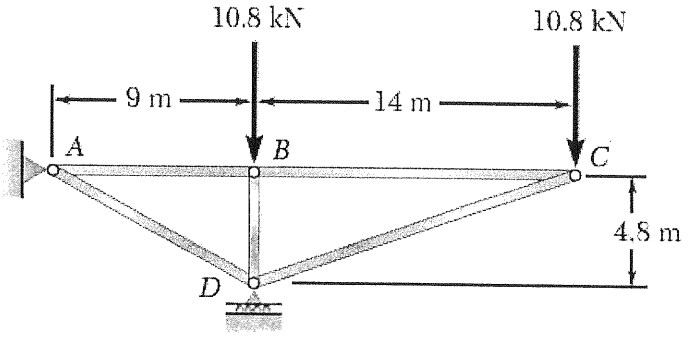

Figure 3

(20 marks)

Question 4

Figure 4 shows the beam cross sections used in structures. Determine the moment of inertia and the radius of gyration of the shaded area with respect to the x axis.

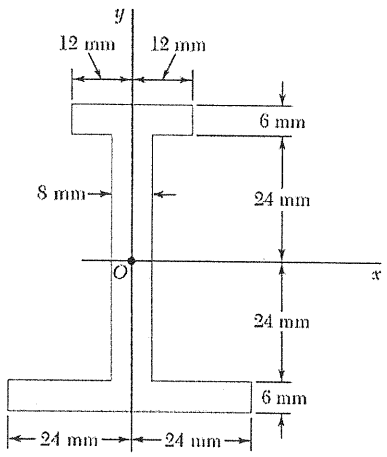

Figure 4

(20 marks)

Question 5

The composite object in Figure 5 consists of a bar welded to a cylinder. The homogeneous bar is aluminum (weight density 168 kg/m³), and the homogeneous cylinder is bronze (weight density 530 kg/m³). By perform the suitable method, calculate and justify the center of mass of the object.

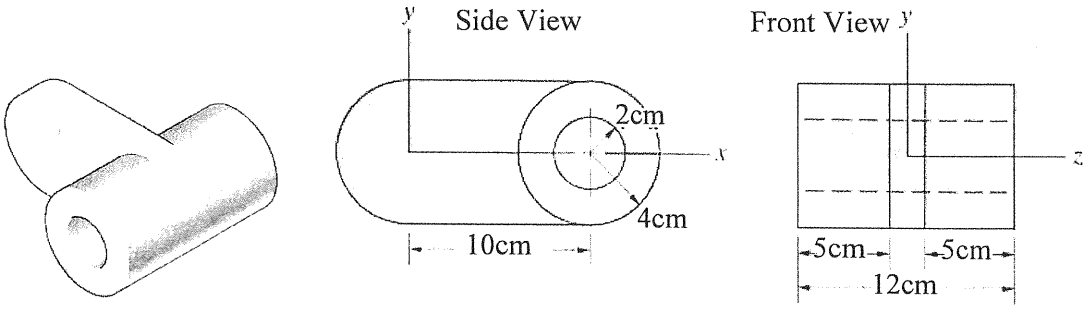

Figure 5

(20 marks)

Question 6

Draw the shear and moment diagrams for the beam, where there are external forces, W_O acting on it as shown in Figure 6.

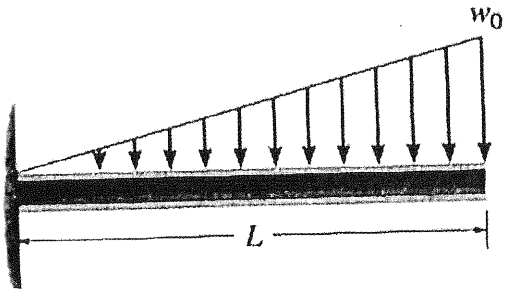

Figure 6

(20 marks)

END OF QUESTION

GEOMETRIC PROPERTIES OF LINE AND AREA ELEMENTS (LGB21703 STATICS)

Centroid Location	Centroid Location	Area Moment of Inertia
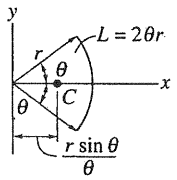 Circular arc segment	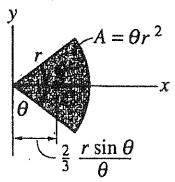 Circular sector area	$I_x = \frac{1}{4} r^4 (\theta - \frac{1}{2}\sin 2\theta)$ $I_x = \frac{1}{4} r^4 (\theta + \frac{1}{2}\sin 2\theta)$
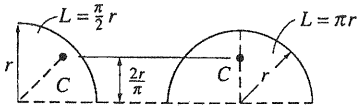 Quarter and semicircle arcs	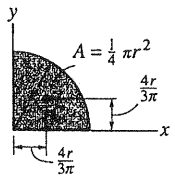 Quarter circle area	$I_x = \frac{1}{16}\pi r^4$ $I_y = \frac{1}{16}\pi r^4$
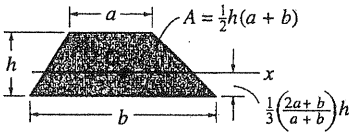 Trapezoidal area	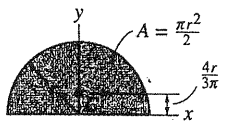 Semicircular area	$I_x = \frac{1}{8}\pi r^4$ $I_y = \frac{1}{8}\pi r^4$
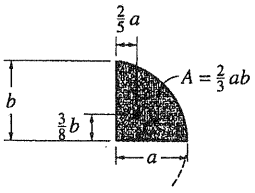 Semiparabolic area	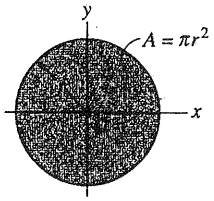 Circular area	$I_x = \frac{1}{4}\pi r^4$ $I_y = \frac{1}{4}\pi r^4$
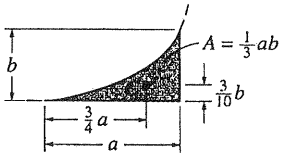 Exparabolic area	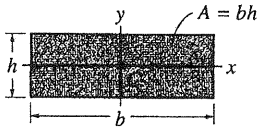 Rectangular area	$I_x = \frac{1}{12}bh^3$ $I_y = \frac{1}{12}hb^3$
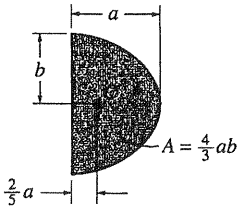 Parabolic area	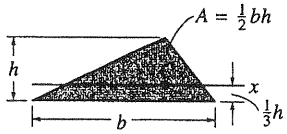 Triangular area	$I_x = \frac{1}{36}bh^3$