**CONFIDENTIAL**

Document No :UniKL MFI_SD_AC41
Revision No: 02
Effective Date: 01 December 2008

**SET A**

# UNIVERSITI KUALA LUMPUR
## Malaysia France Institute

## FINAL EXAMINATION

## SEPTEMBER 2014 SESSION

| | | |
|---|---|---|
| **SUBJECT CODE** | : | **FRD20303** |
| **SUBJECT TITLE** | : | **HEAT TRANSFER & HEAT EXCHANGER** |
| **LEVEL** | : | **DIPLOMA** |
| **TIME / DURATION** | : | **3.00 PM – 6.00 PM ( 3.0 HOURS )** |
| **DATE** | : | **9 JANUARY 2015** |

### INSTRUCTIONS TO CANDIDATES

1. **Please read the instructions given in the question paper CAREFULLY.**
2. **This question paper is printed on both sides of the paper.**
3. **Please write your answers on the answer booklet provided.**
4. **Answer should be written in blue or black ink except for sketching, graphic and illustration.**
5. **This question paper consists of TWO (2) sections. Section A and B. Answer all questions in Section A. For Section B, answer two (2) question only.**
6. **Answer all questions in English.**
7. **Fomulae is appended.**

**THERE ARE 8 PAGES OF QUESTIONS, EXCLUDING THIS PAGE.**

**SECTION A (Total: 60 marks)**

**INSTRUCTION: Answer ALL questions.**
**Please use the answer booklet provided.**

**QUESTION 1**

(a) What the definition heat transfer of conduction and convection?

(4 marks)

(b) Between copper and glass, which one has the higher thermal conductivity? Why?

(3 marks)

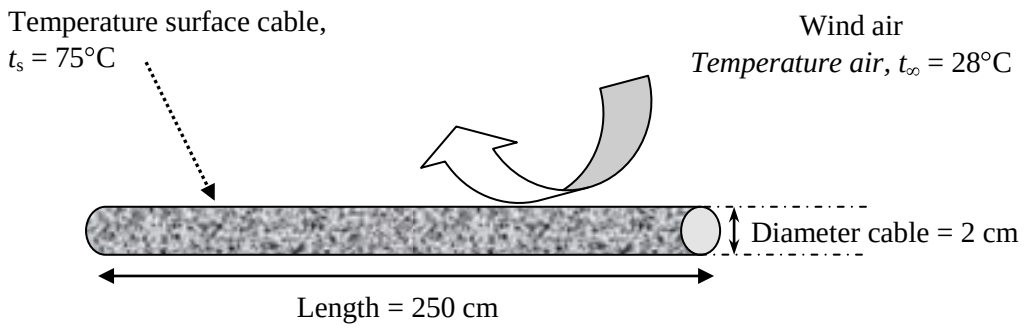


Figure Q1: The Transmission Cable

Referring to figure Q1, The wind at the temperature of $28^0$C and the speed of blows at 3.5 m/sto a 2 cm diameter transmission cable.The surface temperature of the cable is $75^0$C and the length of cable is 250 cm. Given that the Nusselt number is 124 and thermal conductivity of air is 0.0281 W/m. $^0$C,determine:-

(c) The convective heat transfer coefficient in W/m$^2$.$^0$C

(4 marks)

(d) The rate of heat transfer by convection in kW

(5 marks)

(e) The amount of heat transfer (kJ) in 2 hours

(4 marks)

## QUESTION 2

(a) What the definition of radiation and Blackbody?

(3 marks)

(b) Give 2 (two) example for both short-wavelength and long-wavelength

(4 marks)

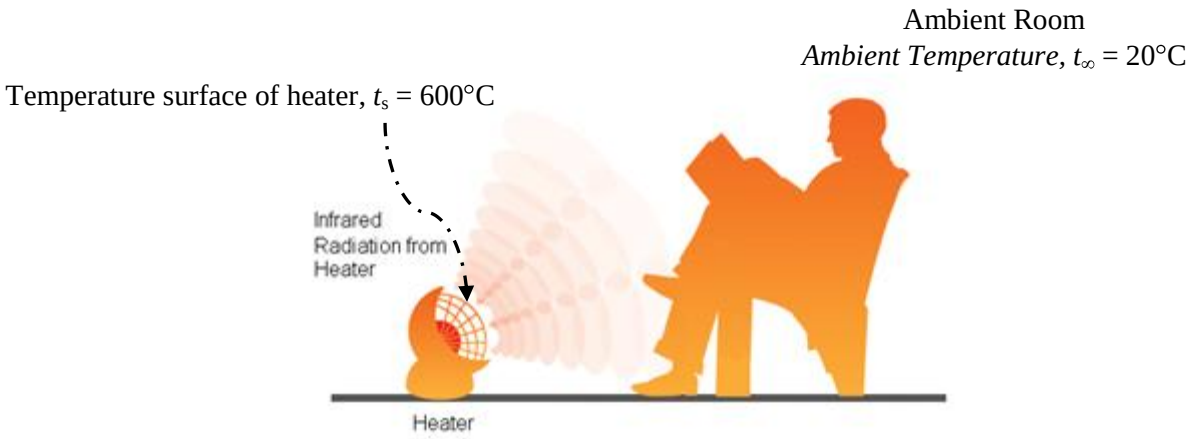


Figure Q2: The Radiant Heater

Referring to figure Q2, a heater use an electricity has an effective 0.87 emissivity at surface temperature of $600^0$C in surroundings temperature at $20^o$C. If the area of the heater surface given is $0.5m^2$and the Stefan Boltzman coefficient is $5.676 \times 10^{-8}$ $W/m^2.K^4$, determine:-

(c) The rate of heat transfer by radiation in kW

(5 marks)

(d) The amount of heat rate (kJ) where the period of heat radiant is 3 hours

(4 marks)

(e) The radiant efficiency (in %) of the heater if the input heat by electricity is 20 kW

(4 marks)

## QUESTION 3

(a) Write the parameters involved in minimizing heat transmission through the building

(3 marks)

(b) What are relation between Thermal Resistance and U-Value Coefficient?

(2 marks)

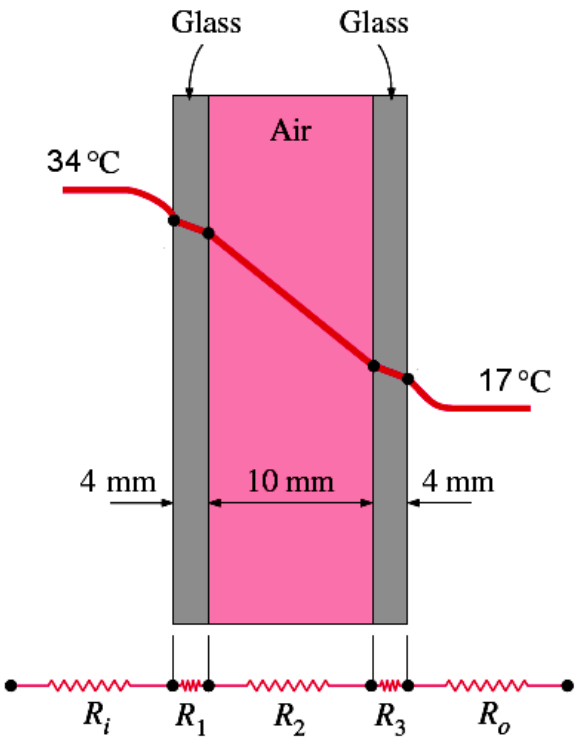


Figure Q3a: The Windows Glass

A1.4 m high and 2.2 m wide double pane windows consists of two layers of glass each and the data of construction for Fig. Q3a as following below:-

Thickness glass = 4 mm

Thickness stagnant air = 10 mm

Thermal conductivity of glass= 0.98 W/m·°C

Thermal conductivity of air = 0.026 W/m·°C

The outside and inside air temperature is 34 °C and 17 °C respectively.

The convective heat transfer coefficient on the inner =10 W/m$^2$. $^0$C

The convective heat transfer coefficient on the outer = 25 W/m$^2$. $^0$C

Determine:-

(c) The total thermal resistance through the windows, in $m^2.^0C$ /W *(3 decimal place)*

(3 marks)

(d) The U-value coefficient, in $W/m^2.\ ^0C$

(3 marks)

(e) The heat transmission through the window in Watt

(3 marks)

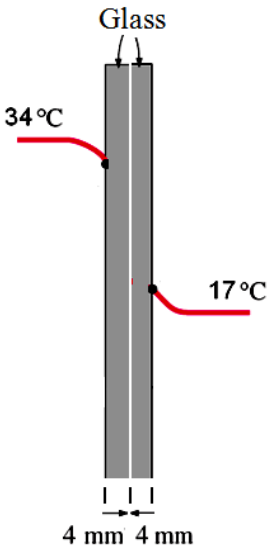


Figure Q3b

(f) The U-value coefficient ($W/m^2.\ ^0C$) for two glasses only (without air gap) as shown in figure Q3b.

(4 marks)

(g) What is the conclusion that can be made between figure Q3a and Q3b?

(2 marks)

**SECTION B (Total: 40 marks)**

**INSTRUCTION: Answer only TWO questions.**
**Please use the answer booklet provided.**

**Question4**

(a) Describe and sketch the temperature profile across the two tubes for:-

i. Parallel Flow heat exchanger operation and,
ii. Counter Flow heat exchanger operation

(6 marks)

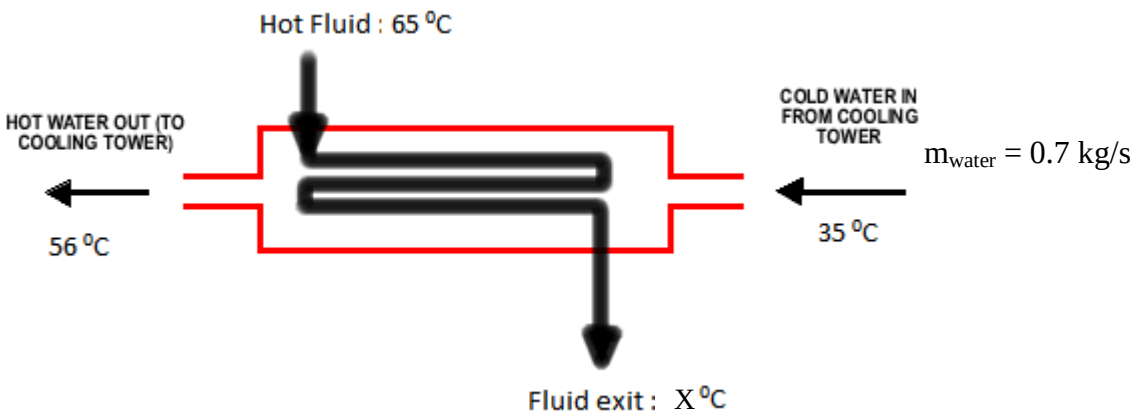


Figure Q4: The heat exchanger of Condenser

Referring to Figure Q4, hot fluid at a temperature of 65$^0$C ($mC_p$=4.5 kW/K ) enters through an outer tube and exchanges counter flow heat with the shell having water from cooling tower enters at 35 $^0$C and exits at 56$^0$Cwith the mass flow rate of water is 0.7 kg/s and specific heat of water is 4.18 kJ/kg. $^0$C, determine:

(b) Prove that the capacity of energy balance is 61.5 kW

(3 marks)

(c) The exit temperature of the hot water in $^0$C

(4 marks)

(d) Sketch the temperature profile.

(3 marks)

(e) The Log Mean Temperature Different, ΔLMTD

(4 marks)

**Question 5**

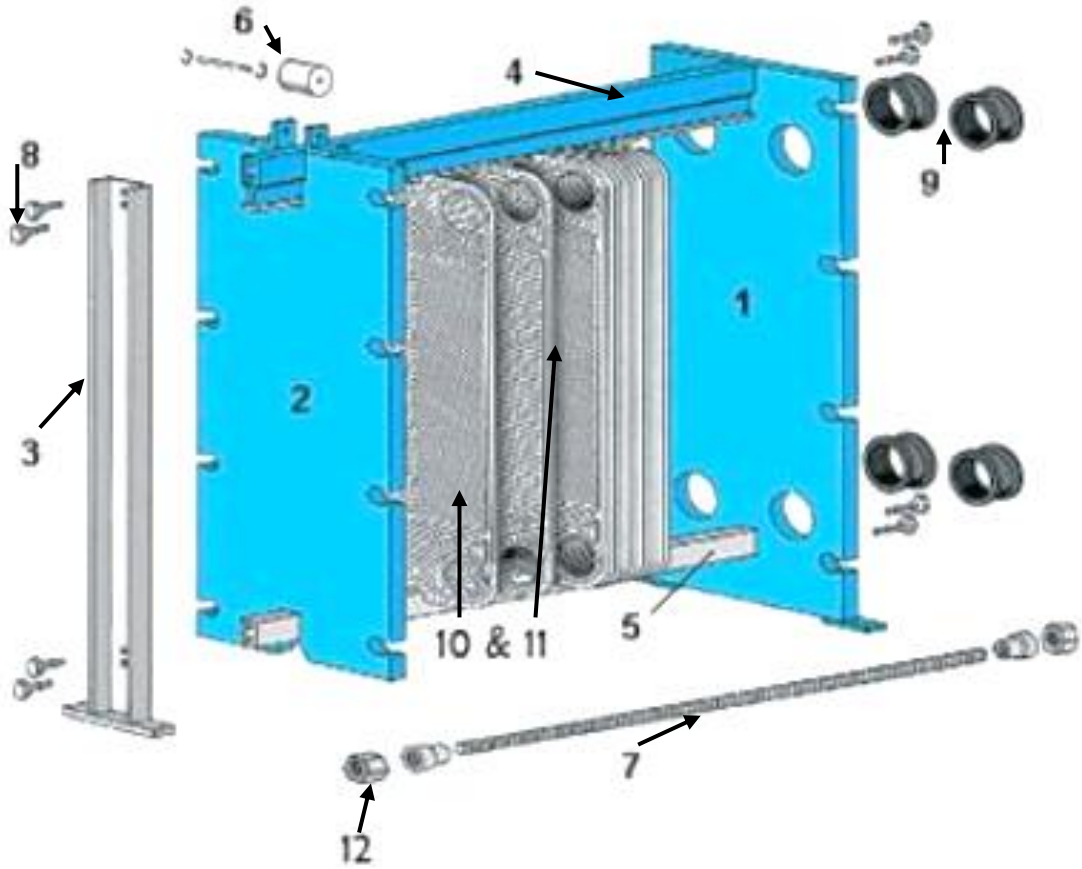


Figure Q5a: Plate heat exchanger

(a) By referring to figure Q4a, Insert the components number in the blank table Q4a below:-***(Please rewrite table Q5a into answer sheet)***

Table Q5a: The Component of Plate Heat Exchanger

| | | | | | |
|---|---|---|---|---|---|
| | Top Carrying Beam | | Fixed Plate | | Roll Assembly |
| | Support Bar | | Lower Guiding Bar | | Liners |
| | Tightening Rods | | Gasket | | Centering Bushing |
| | Pressure Plate | | Plate | | Fixing Bolts |

(6 marks)

Below is a parallel flow heat exchanger made of mild steel specification as shown in Figure Q5b below.

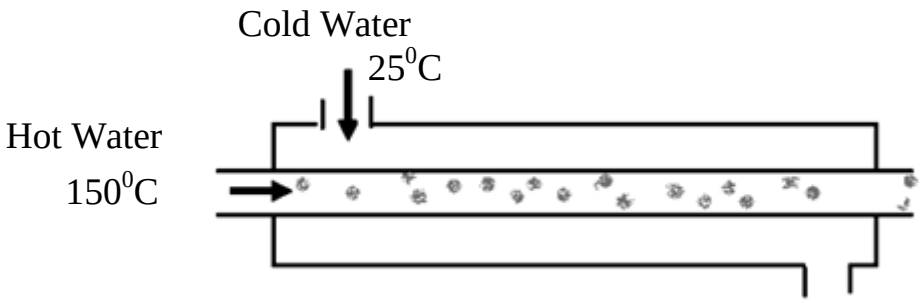


Figure Q5b: Basic Shell-And-Tube heat exchanger

**DATA**

Warm water enters at $25^0$C with the mass flow rate, m = 2 kg/s

Hot water enters at $150^0$C; with the mass flow rate, m = 8 kg/s

Heat Exchanger Surface Area, A = 45 $m^2$,

Overall heat transfer coefficient selection, U: 464.4 $W/m^2.K$

Specific heat for water , Cp = 4.18 kJ/kg.K

Calculate:-

(b) The Capacitance rate of $C_{max}$ and $C_{min}$

(4 marks)

(c) The Capacitance Ratio, C

(2 marks)

(d) The Number of Transfer Unit

(2 marks)

(e) The value of effectiveness heat exchanger by sketching in Appendix 1 (Appendix 1 need to be returned with the answer sheet),

(3 marks)

(f) The rate of heat exchanger, in kW

(3 marks)

**Question 6**

(a) What is function of Transverse baffles?

(2 marks)

(b) Write 1 (one) advantage and disadvantage for shell and tube heat exchanger

(3 marks)

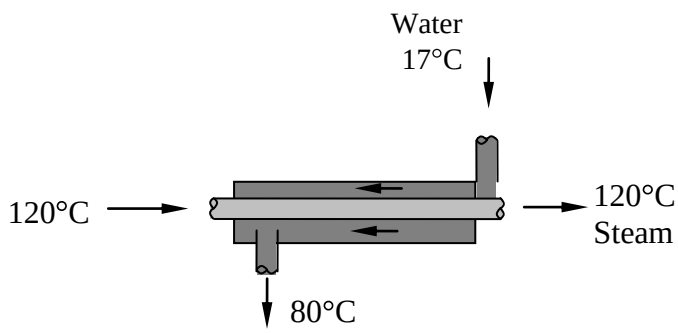


Figure Q6: Shell & Tube Heat Exchanger

Water (Cp = 4.18kJ/kg.$^0$C) enters the 2.5cm internal diameter tube of double pipe counter flow at a temperature of 17 $^0$C and the mass flow rate of 0.5 kg/s heat exchanger as shown in figure Q6. The water is heated by condensing the steam at 120 $^0$C. If the total coefficient of exchange is 0.9 kW/m$^2$.$^0$C, and the water is heated to 80 $^0$C,

Calculate,

(c) The heat transfer rate of the system, in kW (energy balance)

(4 marks)

(d) The Log mean temperature Different, LMTD

(5 marks)

(e) The surface area in m$^2$

(3 marks)

(f) The pipe length of heat exchanger in meter

(3 marks)

**END OF QUESTION**

ID NO: _____

APPENDIX 1 (TO BE RETURNED)

**The effectiveness of parallel and counter-flow heat exchangers from CHART**

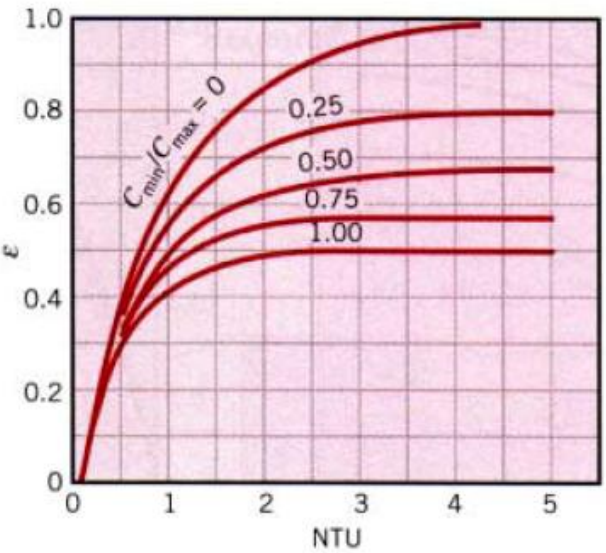


**FIGURE 11.14** Effectiveness of a parallel-flow heat exchanger

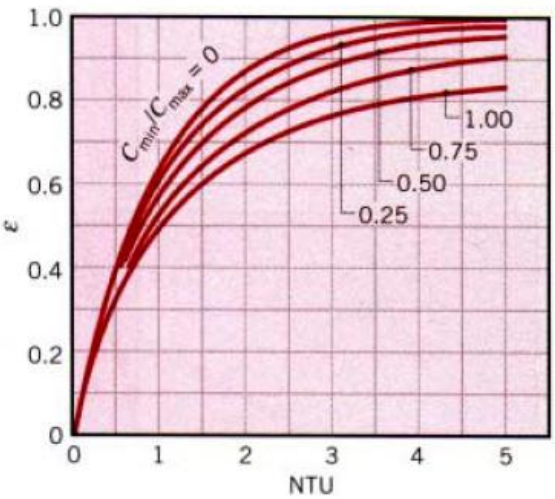


**FIGURE 11.15** Effectiveness of a counterflow heat exchanger

## APPENDIX 2

### 1. Fourier's Law of Conduction.

$$Q = k \times A \times \frac{\Delta t}{\Delta x}$$

Where
Q = The rate of heat transfer by conduction, W or Btu/hr
k = The thermal conductivity, $\frac{W}{m.C}$ or $\frac{Btu}{hr.ft.F}$
A = the area surface to the direction of heat flow, $m^2$ or $ft^2$
$\Delta$t = different temperature ($t_{higher}$ - $t_{lower}$), unit $^0$C or $^0$F
$\Delta$x = thickness distance in the direction of heat flow, m or ft

### 2. Forced Convection - NEWTON'S LAW

$$Q = h \times A \times (t_{surf} - t_{surr})$$

*Q =The* rate of heat transfer by convection, W or Btu/hr
*h* = The convection heat-transfer coefficient, $\frac{W}{m^2.C}$ or $\frac{Btu}{hr.ft^2.F}$
*A* = exposed surface area, $m^2$ or $ft^2$
$t_s$ = temperature of the immersed object (surface), $^0$C or F
$t_0$ = temperature of the fluid surrounding, $^0$C or F

### 3 <u>Stefan Boltzman Law's</u>

$$Q = \varepsilon \times A \times \sigma \times ({T_1}^4 - {T_2}^4)$$

Where:
Q = The heat transfer rate by radiation, Watt or Btu/hr
σ = *Stefan-Boltzman constant:*-0.1714 x $10^{-8}\frac{Btu}{hr.ft^2.R^4}$ for IP unit
5.676 x $10^{-8}\frac{W}{m^2.K^4}$ for SI unit
A = Area surface in $m^2$ or $ft^2$
ε = emissivity (Blackbody = 1 or Greybodies 0< ε <1)
$T^4 = ({T_1}^4 - {T_2}^4)$ , $T_1$ = Temperature of the first body, K or $^0$R
$T_2$ = Temperature of second body, K or $^0$R

### 4. Heat transmission,

$$Q_{trans} = Area \times uvalue \times (t_{out} - t_{in})$$

Where, A = Area of the wall surface, **$m^2$ or $ft^2$**
U = U-Value, $\frac{W}{m^2.C}$ or $\frac{Btu}{hr.ft^2.F}$
$t_{out}$ = Temperature out, **$^o$C or $^o$F**
$t_{in}$ = Temperature in, **$^o$C or $^o$F**

$$Uvalue = \frac{1}{TOTAL\ THERMAL\ RESISTANCE}$$

$$Uvalue = \frac{1}{\Sigma R_T}$$

**a) R = Thermal Resistance.**

$$R = \frac{\Delta x}{k}$$

**b) C = Thermal Conductance.**

$C = \frac{1}{R}$, Resistance due conductance, $R = \frac{1}{C}$

**c) = Surface conductance of convective heat transfer**

$R_{out} = \frac{1}{h_{out}}$ ,$R_{out} = \frac{1}{h_{out}}$

**5. Log mean temperature different, ΔLMTD**

$$Q = U \times A \times \Delta LMTD$$

where

*Q* = heat transfer rate, W or Btu/hr

*U* = overall heat transfer coefficient, $\frac{m^2 C}{W}$ **or** $\frac{hr.F.ft^2}{Btu}$

*A* = Area Surface, $m^2$ or $ft^2$

*ΔLMTD* = log mean temperature difference, K or R

$$\Delta LMTD = \frac{(\Delta T_2 - \Delta T_1)}{Ln\left(\frac{\Delta T_2}{\Delta T_1}\right)}$$

**6. Energy Balance.**

$$Energy\ Fluid\ A = Energy\ Fluid\ B$$

$$Q_A = Q_B = m \times C_p \times \Delta t$$

Where

Q = the rate of capacity, W

m = mass of fluid, kg/s

Cp = specific heat, J/kg.C or J/kg.K

ΔT = Different temperature, K

## 7. NTU Method

$$Q = \varepsilon \times C_{min} \times t_{hot\ in} - t_{cold\ in}$$

where ε = effectiveness

$C_{min}$ = Heat capacity rate.

$t_{hot\ in}$= temperature hot inlet

$t_{cold\ in}$ = Temperature cold inlet

a) The capacitance rate

$$C_{hotfluid} = m_{hotfluid} \times c_{p_{hot\ fluid}}$$

$$C_{coldfluid} = m_{coldfluid} \times c_{p_{cold\ fluid}}$$

$C_h$ and $C_c$ = The capacitance rate, W/K

m = The mass flow rate, kg/s

$C_p$= The Specific heat, J/kg.K or J/kg.C

Note:-

$C_{coldfluid}$ or $C_{hotfluid}$ is lower value = $C_{min}$

$C_{coldfluid}$ or $C_{hotfluid}$ is higher value = $C_{max}$

b) The Capacitance Ratio, Cr as following below:-

$$C_r = \frac{C_{min}}{C_{max}}$$

c) The Variable formula of NTU

$$NTU = \frac{U \times A}{C_{min}}$$

where , NTU = number of transfer unit in dimensionless parameter

U = Overall heat Transfer Coefficient

A = Area surface

$C_{min}$ = depending the value of $C_h$ and $C_c$

## 8. Radiant Efficiency

$$Radiant\ Efficiency, \eta\ rad = \frac{Output\ heat\ by\ radiation}{input\ heat\ by\ natural\ gas} \times 100\%$$