Document No : UniKL MFI_SD_AC41
Revision No: 02
Effective Date: 01 December 2008

CONFIDENTIAL

SET A

UNIVERSITI KUALA LUMPUR
Malaysia France Institute

FINAL EXAMINATION
JANUARY 2010 SESSION

SUBJECT CODE	:	FCB 20603
SUBJECT TITLE	:	HEATING & COOLING LOAD
LEVEL	:	BACHELOR
TIME / DURATION	:	12.00 noon – 3.00 pm (3 HOURS)
DATE	:	26 APRIL 2010

INSTRUCTIONS TO CANDIDATES

1. Answer all question in English.
2. Please write your answers on the answer booklet provided.
3. Answer should be written in blue or black ink except for sketching, graphic and illustration.
4. The design data booklet is provided.

THERE ARE 5 PAGES OF QUESTIONS, EXCLUDING THIS PAGE.

Question 1

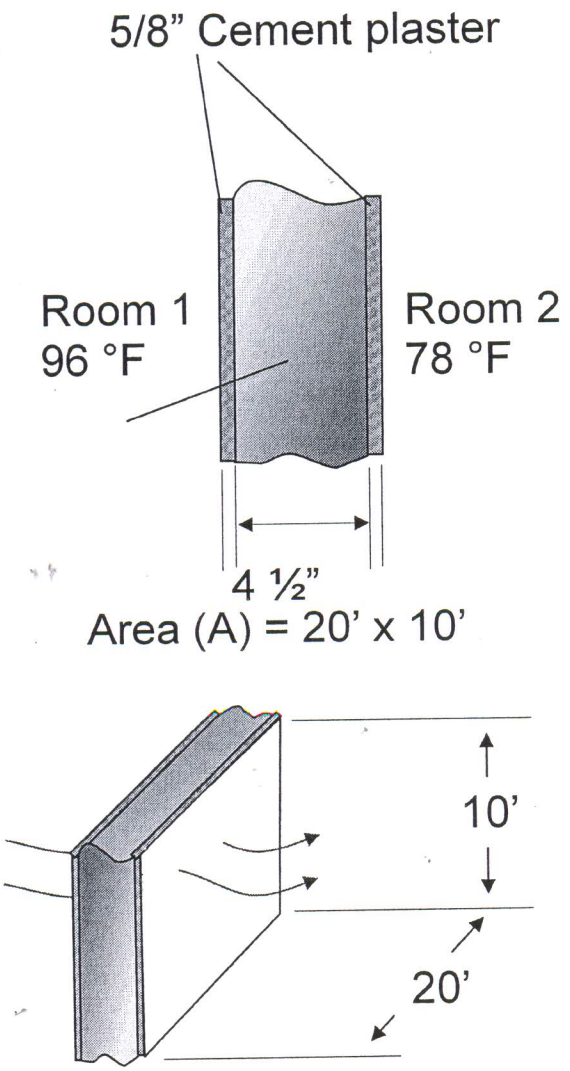

Figure Q1 Wall construction

Figure Q1 above shows a wall construction of an office building. Estimate the heat loss, Q, through a 20 ft. by 10 ft. area of wall.

(25 marks)

Question 2.

Calculate the following parameters for solar radiation following on a horizontal surface at 2:00 pm on 21 July in Bangi. Neglect reflected radiation. (Longitude (Bangi) = 101° 48' E, latitude (Bangi) =2 ° 56' N).

2.1 Solar time, t_{sol}

(2 marks)

2.2 Hour angle, h

(2 marks)

2.3 Solar altitude, β

(2 marks)

2.4 Solar azimuth, Φ

(2 marks)

2.5 Angle of incidence, θ

(2 marks)

2.6 Direct normal radiation, G_{ND}

(3 marks)

2.7 Direct radiation, G_D

(3 marks)

2.8 Diffuse radiation, G_d

(4 marks)

2.9 Total radiation, G_t

(5 marks)

JANUARY 2010

Question 3

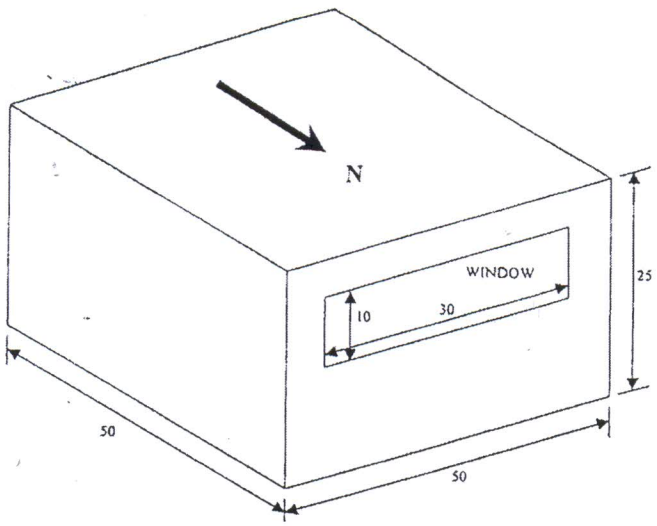

Figure Q3 Single-zone building (Units for dimension is in ft.)

A single-zone building in Kuala Lumpur is shown in figure 1. The building construction is as follows:

Roof : 4-in lightweight concrete with suspended ceiling.
Walls : 4-in concrete wall.
Window : Green, low-emissivity, single glazed glass pane and is internally shaded.
Floor : 75 mm concrete floor and is not carpeted.
Interior furnishing : For office use.
Date : July 21.
Outdoor condition : 1% dry-bulb temperature 32.2°C,
Mean wet-bulb temperature for outdoor : 25.9°C.
Daily dry-bulb temperature range : 6.3°C.
Building's interior : 25°C and 50% RH from 6:00am to 5:00pm solar time.
Building function : For office use.
Occupant : 30 people from 8:00am to 5:00pm.
Infiltration : No infiltration.
Mechanical ventilation rate : Medium.
Heat gain from suspended fluorescent (unvented) lights : 1.5 W/ft^2 and lasts from 8:00am to 5:00pm.
Heat gain from computers and other office equipment (appliances) : 1 W/ft^2 and lasts from 8:00am to 5:00pm.
Occupants : Seated and performing light office work.

JANUARY 2010

Show all your calculations for the following questions in the answer script and fill in your answers in Table 1 at page 5. **(To be returned)**

(a) Find the shading coefficient (SC) and the U-value of the glazing used,
(b) Find the U-values of the roof and walls,
(c) Find the sensible and latent heat gains from all the occupants,
(d) Determine the instantaneous latent load of the conditioned space for 2:00 pm and 5:00 pm,
(e) Determine the instantaneous sensible load in the conditioned space due separately to the walls, roof, glazing, occupant, lightings, and equipment for 2:00pm and 5:00pm,
(f) Determine the instantaneous total load of the conditioned space for 2:00pm and 5:00pm,
(g) From the specified time given in the question above i.e 2:00pm and 5:00pm which one carries the highest load,

(50 marks)

Table 1. Cooling Load list

					Solar time	
	Month = July	5.678 W/m2.K			2:00pm	5:00pm
		light office work=45 W				
Latent loads						
	Occupant					
Sensible loads		U (W/[m2.K])	A (m2)			
	North-facing wall					
	South-facing wall					
	East-facing wall					
	West-facing wall					
	Roof					
	Glazing (conduction)					
		SC	A (m2)	SHGFmax		
	Glazing (solar)					
	Appliances					
	Lights					
	Occupants					
Total load						
		Window is north facing				

To change thermal conductivity, k from English unit to SI unit, multiply by 5.678 W/m².K

END OF QUESTIONS

DESIGN DATA BOOKLET FOR FCB 20603 HEATING & COOLING LOAD

USEFUL FORMULAE

1. $t_{sol} = t_{std} - (L_{std} - L_{loc})\ 4 + E_t$
2. For Bangi, $L_{std} = 120$, $L_{loc} = 101° 48'$, $l = 2° 56'$, $h = t_{sol} - 12{:}00$
3. $\sin \beta = \cos l \cos h \cos d + \sin l \sin d$
4. $\cos \phi = (\sin \beta \sin l - \sin d) / (\cos \beta \cos l)$
5. $\cos \theta = \cos \beta \cos \gamma$
6. $\gamma = \phi - \psi$
7. $G_{ND} = A / \exp (B/ \sin \beta)$
8. $G_D = G_{ND} \cos \theta$
9. $G_d = C\ G_{ND}$
10. $G_R = G_{th}\ \rho\ F_{wg}$
11. $F_{wg} = (1 - \cos \Sigma) / 2$ where $\Sigma = 90 - \alpha$ ($\alpha = 0$ for horizontal)
12. For horizontal surface, $\cos \theta = \sin \beta$
13. $G_t = G_D + G_d + G_R$
14. $q = - kA \frac{dt}{dx}$
15. $R = \frac{dx}{k} = \frac{1}{C}$
16. $C = \frac{1}{R} = \frac{k}{dx}$
17. $U = 1/\Sigma R$
18. $q = UA dt$
19. $Q_{c,cond,t} = UA$ **CLTD**
20. $CLTD_{corr} = (CLTD + LM)K + (25.5°C - T_i) + (T_{o,av} - 29.4°C)$
21. $Q_{c,glass,t} = UA$ **CLTD** $_{glass,t}$
22. $Q_{c,sol,t} = A \times SC \times SHGF_{max} \times$ **CLF**$_t$
23. $Q_{lit,t} = Q_{lit\ or\ app}$ **CLF**$_{lit\ or\ aoo,t}$
24. $Q_{occ,t} = Q_{occ}$ **CLF**$_{occ,t}$

USEFUL FORMULAE. (Additional)

1. $t_{sol} = t_{std} - (L_{std} - L_{loc})\ 4 + E_t$
2. For Bangi, $L_{std} = 120°$, $L_{loc} = 101°\ 48'$ E, l = 2° 56' N
3. For Pulau Pinang, $L_{std} = 120°$ E, $L_{loc} = 100°\ 16'$ E, l = 5° 25' N
4. For Kota Kinabalu, $L_{std} = 120°$ E, $L_{loc} = 116°\ 5'$ E, l = 5° 59' N
5. $\sin \beta = \cos l \cos h \cos d + \sin l \sin d$
6. $\cos \phi = (\sin \beta \sin l - \sin d) / (\cos \beta \cos l)$
7. $\cos \theta = \cos \beta \cos \gamma \sin \alpha + \sin \beta \cos \alpha$
8. $\gamma = \phi - \psi$
9. $q = - kA \frac{dt}{dx}$
10. $R = \frac{dx}{k} = \frac{1}{C}$
11. $C = \frac{1}{R} = \frac{k}{dx}$
12. $U = 1/\Sigma R$
13. $q = UA dt$

⇒ For vertical surface ($\alpha = 90°$)

$\cos \theta = \cos \beta \cos \gamma$

⇒ For horizontal surface ($\alpha = 0°$)

$\cos \theta = \sin \beta$

Table 5-2a Thermal Properties of Building and Insulating Materials at a Mean Temperature of 75 F (English Units)

Material	Description	Density ρ lbm/ft³	Thermal Conductivity k Btu-in./ft²-hr-F	Unit Conductance C Btu/hr-ft²-F	Unit Resistance: Per Inch Thickness $1/k$ ft²-hr-F/Btu-in.	Unit Resistance: For Thickness Listed $1/C$ hr-ft²-F/Btu	Specific Heat Btu/lbm-F
Building Board	Asbestos-cement board						
Boards, panels, subflooring, sheathing, wood-based panel products	¼ in. or 6 mm	120	—	16.5	—	0.06	0.24
	Gypsum or plasterboard						
	⅜ in. or 10 mm	50	—	3.10	—	0.32	0.26
	½ in. or 13 mm	50	—	2.22	—	0.45	
	Plywood	34	0.80	—	1.25	—	0.29
	¼ in. or 6 mm	34	—	3.20	—	0.31	0.29
	⅜ in. or 10 mm	34	—	2.13	—	0.47	0.29
	½ in. or 13 mm	34	—	1.60	—	0.62	0.29
	¾ in. or 20 mm	34	—	1.07	—	0.93	0.29
	Insulating board and sheathing, regular density						
	½ in. or 13 mm	18	—	0.76	—	1.32	0.31
	¾ in. or 20 mm	18	—	0.49	—	2.06	0.31
	Hardboard, high density, standard tempered	63	1.00	—	1.00	—	0.32
	Particle board						
	Medium density	50	0.94	—	1.06	—	0.31
	Underlayment						
	⅝ in. or 16 mm	40	—	1.22	—	0.82	0.29
	Wood subfloor						
	¾ in. or 20 mm	—	—	1.06	—	0.94	0.33

Table 5-2a Thermal Properties of Building and Insulating Materials at a Mean Temperature of 75 F (English Units) (*Continued*)

Material	Description	Density ρ lbm/ft³	Thermal Conductivity k Btu-in./ft²-hr-F	Unit Conductance C Btu/hr-ft²-F	Unit Resistance: Per Inch Thickness $1/k$ ft²-hr-F/Btu-in.	Unit Resistance: For Thickness Listed $1/C$ hr-ft²-F/Btu	Specific Heat Btu/lbm-F
Building Paper	Vapor—permeable felt	—	—	16.7	—	0.06	
	Vapor—seal, two layers of mopped 15-lb felt	—	—	8.35	—	0.12	
Finish Flooring Materials	Carpet and fibrous pad	—	—	0.48	—	2.08	0.34
	Carpet and rubber pad	—	—	0.81	—	1.23	0.33
	Tile—asphalt, linoleum, vinyl, or rubber	—	—	20.0	—	0.05	0.30
Insulating Materials	Mineral fiber—fibrous form processed from rock, slag, or glass						
Blanket and batt	Approximately 2–2½ in. or 50–70 mm	0.3–2.0	—	0.143	—	7	0.17–0.23
	Approximately 3–3½ in. or 75–90 mm	0.3–2.0	—	0.091	—	11	0.17–0.23
	Approximately 5½–6½ in. or 135–165 mm	0.3–2.0	—	0.053	—	19	0.17–0.23
Board and slabs	Cellular glass	8.5	0.38	—	2.63	—	0.24
	Glass fiber, organic bonded	4–9	0.25	—	4.00	—	0.23
	Expanded polystyrene—molded beads	1.0	0.28	—	3.57	—	0.29
	Expanded polyurethane—R-11 expanded	1.5	0.16	—	6.25	—	0.38
	Mineral fiber with resin binder	15	0.29	—	3.45	—	0.17

CONFIDENTIAL

Loose Fill	Mineral fiber—rock, slag, or glass						
	Approximately 3.75–5 in. or 75–125 mm	0.6–2.0	—		—	11	0.17
	Approximately 6.5–8.75 in. or 165–222 mm	0.6–2.0	—		—	19	0.17
	Approximately 7.5–10 in. or 191–254 mm	—	—		—	22	0.17
	Approximately 7¼ in. or 185 mm	—	—		—	30	0.17
	Silica aerogel	7.6	0.17	—	5.88	—	
	Vermiculite (expanded)	7–8	0.47	—	2.13	—	
Roof Insulation	Preformed, for use above deck						
	Approximately ½ in. or 13 mm	—	—	0.72	—	1.39	
	Approximately 1 in. or 25 mm	—	—	0.36	—	2.78	
	Approximately 2 in. or 50 mm	—	—	0.19	—	5.56	
	Cellular glass	9	0.4	—	2.5	—	0.24
Masonry Materials Concretes	Lightweight aggregates including	200	5.2	—	0.19	—	
	expanded shale, clay, or slate;	100	3.6	—	0.28	—	—
	expanded slags; cinders;	80	2.5	—	0.40	—	—
	pumice; vermiculite; also	40	1.15	—	0.86	—	—
	cellular concretes	20	0.70	—	1.43	—	—
	Sand and gravel or stone aggregate (not dried)	140	12.0	—	0.08	—	
Masonry Units	Brick, common	120	5.0	—	0.20	—	
	Brick, face	130	9.0	—	0.11	—	
	Concrete blocks, three-oval core—sand and gravel aggregate						
	4 in. or 100 mm	—	—	1.4	—	0.71	
	8 in. or 200 mm	—	—	0.9	—	1.11	
	12 in. or 300 mm	—	—	0.78	—	1.28	

Table 5-2a Thermal Properties of Building and Insulating Materials at a Mean Temperature of 75 F (English Units) (*Continued*)

Material	Description	Density ρ lbm/ft³	Thermal Conductivity k Btu-in./ft²-hr-F	Unit Conductance C Btu/hr-ft²-F	Unit Resistance: Per Inch Thickness $1/k$ ft²-hr-F/Btu-in.	Unit Resistance: For Thickness Listed $1/C$ hr-ft²-F/Btu	Specific Heat Btu/lbm-F
	Lightweight aggregate (expanded shale, clay slate or slag; pumice)						
	3 in. or 75 mm	—	—	0.79	—	1.27	
	4 in. or 100 mm	—	—	0.67	—	1.50	
	8 in. or 200 mm	—	—	0.50	—	2.00	
	12 in. or 300 mm	—	—	0.44	—	2.27	
Plastering Materials	Cement plaster, sand, aggregate	116	5.0	—	0.20	—	
	Gypsum plaster:						
	Lightweight aggregate						
	½ in. or 13 mm	45	—	3.12	—	0.32	—
	⅝ in. or 16 mm	45	—	2.67	—	0.39	—
	Lightweight aggregate on metal lath						
	¾ in. or 20 mm	—	—	2.13	—	0.47	—
Roofing	Asbestos-cement shingles	120	—	4.76	—	0.21	—
	Asphalt roll roofing	70	—	6.50	—	0.15	—
	Asphalt shingles	70	—	2.27	—	0.44	—
	Built-in roofing						
	⅜ in. or 10 mm	70	—	3.00	—	0.33	0.35
	Slate, ½ in. or 13 mm	—	—	20.00	—	0.05	
	Wood shingles—plain or plastic film faced	—	—	1.06	—	0.94	0.31

Siding Materials (on flat surface)	Shingles						
	Asbestos-cement	120	—	4.76	—	0.21	
	Siding						
	Wood, drop, 1 in. or 25 mm	—	—	1.27	—	0.79	0.31
	Wood, plywood, $\frac{1}{2}$ in. or 10 mm, lapped	—	—	1.59	—	0.59	0.29
	Aluminum or steel, over sheathing, hollowbacked	—	—	1.61	—	0.61	
	Insulating board—backed nominal, $\frac{3}{8}$ in. or 10 mm	—	—	0.55	—	1.82	
	Insulating board—backed nominal, $\frac{3}{8}$ in. or 10 mm, foil-backed	—	—	0.34	—	2.96	
	Architectural glass	—	—	10.00	—	0.10	
Woods	Maple, oak, and similar hardwoods	45	1.10	—	0.91	—	0.30
	Fir, pine, and similar softwoods	32	0.80	—	1.25	—	0.33
Metals	Aluminum (1100)	171	1536	—	0.00065	—	0.214
	Steel, mild	489	314	—	0.00318	—	0.120
	Steel, stainless	494	108	—	0.00926	—	0.109

Source: Abstracted by permission from *ASHRAE Handbook, Fundamentals Volume*, 1985.

24

Table 5-2b Thermal Properties of Building and Insulating Materials at a Mean Temperature of 24 C (SI UNITS)

Material	Description	Density ρ kg/m³	Thermal Conductivity k W/m-C	Unit Conductance C W/m²-C	Unit Resistance: Per Meter Thickness $1/k$ m-C/W	Unit Resistance: For Thickness Listed $1/C$ m²-C/W	Specific Heat kJ/kg-C
Building Board	Asbestos-cement board	1922	—	93.7	—	0.011	1.00
Boards, panels, subflooring, sheathing, woodbased panel products	$\frac{1}{4}$ in. or 6 mm						
	Gypsum or plasterboard						
	$\frac{3}{8}$ in. or 10 mm	800	—	17.6	—	0.057	1.09
	$\frac{1}{2}$ in. or 13 mm	800	—	12.6	—	0.078	—
	Plywood	545	0.12	—	8.70	—	1.21
	$\frac{1}{4}$ in. or 6 mm	545	—	18.2	—	0.055	1.21
	$\frac{3}{8}$ in. or 10 mm	545	—	12.1	—	0.083	1.21
	$\frac{1}{2}$ in. or 13 mm	545	—	9.09	—	0.110	1.21
	$\frac{3}{4}$ in. or 20 mm	545	—	6.08	—	0.165	1.21
	Insulating board and sheathing, regular density						
	$\frac{1}{2}$ in. or 13 mm	288	—	4.32	—	0.232	1.30
	$\frac{25}{32}$ in. or 20 mm	288	—	2.78	—	0.359	1.30
	Hardboard, high density, standard tempered	1010	0.14	—	6.94	—	1.34
	Particleboard						
	Medium density	800	0.14	—	7.35	—	1.30
	Underlayment						
	$\frac{3}{8}$ in. or 16 mm	640		6.93	—	0.144	1.21
	Wood subfloor						
	$\frac{3}{4}$ in. or 20 mm	—	—	6.02	—	0.166	1.38

25

	mopped 15-lb felt	—	—	47.4	—	0.021	
Finish Flooring Materials	Carpet and fibrous pad	—	—	2.73	—	0.367	1.42
	Carpet and rubber pad	—	—	4.60	—	0.217	1.38
	Tile—asphalt, linoleum, vinyl, or rubber	—	—	113.0	—	0.009	1.26
Insulating Materials							
Blanket and batt	Mineral fiber—fibrous form processed from rock, slag, or glass. Approximately 2–2¾ in. or 50–70 mm	4.8–32	—	0.812	—	1.23	0.71–0.96
	Approximately 3–3½ in. or 75–90 mm	4.8–32	—	0.517	—	1.94	0.71–0.96
	Approximately 5¼–6½ in. or 135–165 mm	4.8–32	—	0.301	—	3.32	0.71–0.96
Board and slabs	Cellular glass	136	0.0548	—	18.2	—	1.0
	Glass fiber, organic bonded	64–144	0.036	—	27.8	—	0.96
	Expanded polystyrene—molded beads	16	0.040	—	25.0	—	1.2
	Expanded polyurethane—R-11 expanded	24	0.023	—	43.5	—	1.6
	Mineral fiber with resin binder	240	0.042	—	23.9	—	0.71
Loose Fill	Mineral fiber—rock, slag, or glass						
	Approximately 3.75–5 in. or 75–125 mm	9.6–32	—		—	1.94	0.71
	Approximately 6.5–8.75 in. or 165–22 mm	9.6–32	—	0.45	—	3.35	0.71
	Approximately 7.5–10 in. or 191–254 mm	—	—	0.28	—	3.87	0.71
	Approximately 7¼ in. or 185 mm	—	—	0.23	—	5.28	0.71
	Silica aerogel	122	0.025	—	40.8	—	
	Vermiculite (expanded)	122	0.068	—	14.8	—	

Table 3-2b Thermal Properties of Building and Insulating Materials at a Mean Temperature of 24 C (SI UNITS) (*Continued*)

Material	Description	Density ρ kg/m³	Thermal Conductivity k W/m-C	Unit Conductance C W/m²-C	Unit Resistance: Per Meter Thickness $1/k$ m-C/W	Unit Resistance: For Thickness Listed $1/C$ m²-C/W	Specific Heat kJ/kg-C
Roof Insulation	Preformed, for use above deck						
	Approximately ½ in. or 13 mm	—	—	4.1	—	0.24	1.0
	Approximately 1 in. or 25 mm	—	—	2.0	—	0.49	2.1
	Approximately 2 in. or 50 mm	—	—	1.1	—	0.93	3.9
	Cellular glass	144	0.058	—	17.3	—	1.0
Masonry Materials							
Concretes	Lightweight aggregates including expanded shale, clay, or slate; expanded slags; cinders; pumice; vermiculite; also cellular concretes	3200	0.75	—	1.32	—	—
		1600	0.52	—	1.94	—	—
		1280	0.36	—	2.77	—	—
		640	0.17	—	6.03	—	—
		320	0.10	—	10.0	—	—
	Sand and gravel or stone aggregate (not dried)	2242	1.73	—	0.58	—	—
Masonry Units	Brick, common	1922	0.72	—	1.39	—	—
	Brick, face	2082	1.30	—	0.77	—	—
	Concrete blocks, three-oval core—sand and gravel aggregate						
	4 in. or 100 mm	—	—	8.0	—	0.13	—
	8 in. or 200 mm	—	—	5.1	—	0.20	—
	12 in. or 300 mm	—	—	4.4	—	0.23	

CONFIDENTIAL

	lightweight aggregate (expanded shale, clay slate or slag; pumice)						
	3 in. or 75 mm	—	—	4.5	—	0.22	
	4 in. or 100 mm	—	—	3.8	—	0.26	
	8 in. or 200 mm	—	—	2.8	—	0.35	
	12 in. or 300 mm	—	—	2.5	—	0.40	
Plastering Materials	Cement plaster, sand aggregate,	1858	0.72	—	1.39	—	
	Gypsum plaster:						
	Lightweight aggregate						
	$\frac{5}{8}$ in. or 13 mm	721	—	17.7	—	0.056	
	$\frac{5}{8}$ in. or 16 mm	721	—	15.2	—	0.066	
	Lightweight aggregate on metal lath						
	$\frac{1}{2}$ in. or 20 mm	—	—	12.1	—	0.83	
Roofing	Asbestos-cement shingles	1922	—	27.0	—	0.037	
	Asphalt roll roofing	1121	—	36.9	—	0.027	
	Asphalt shingles	1121	—	12.9	—	0.078	
	Built-up roofing						
	$\frac{3}{8}$ in. or 10 mm	1121	—	17.0	—	0.059	
	Slate, $\frac{1}{2}$ in. or 13 mm	—	—	113.6	—	0.009	
	Wood shingles—plain or plastic film faced	—	—	6.02	—	0.166	
Siding Materials (on flat surface)	Shingles						
	Asbestos-cement	1922	—	27.0	—	3.70	
	Siding						
	Wood, drop, 1 in. or 25 mm	—	—	7.21	—	0.139	1.30
	Wood, plywood, $\frac{3}{8}$ in. or 10 mm, lapped	—	—	9.03	—	0.111	1.21

2.8

Table 5-2b Thermal Properties of Building and Insulating Materials at a Mean Temperature of 24 C (SI UNITS) (*Continued*)

Material	Description	Density ρ kg/m³	Thermal Conductivity k W/m-C	Unit Conductance C W/m²-C	Unit Resistance: Per Meter Thickness $1/k$ m-C/W	Unit Resistance: For Thickness Listed $1/C$ m²-C/W	Specific Heat kJ/kg-C
	Aluminum or steel, over sheathing, hollowbacked	—	—	9.14	—	0.109	
	Insulating board—backed nominal, $\frac{1}{2}$ in. or 10 mm	—	—	3.12	—	0.320	—
	Insulating board backed nominal, $\frac{1}{2}$ in. or 10 mm, foil-backed	—	—	1.93	—	0.518	—
	Architectural glass	—	—	56.8	—	0.018	—
Woods	Maple, oak, and similar hardwoods	721	0.159	—	6.3	—	1.26
	Fir, pine, and similar softwoods	513	0.115	—	8.67	—	1.38
Metals	Aluminum (1100)	2739	221.5	—	0.0045	—	0.896
	Steel, mild	7833	45.3	—	0.022	—	0.502
	Steel, stainless	7913	15.6	—	0.064	—	0.456

Source: Adapted by permission from *ASHRAE Handbook, Fundamentals Volume*, 1985.

2.9

CONFIDENTIAL

Table 5-3*a* Surface Unit Conductances and Unit Resistances for Air[a]

		Surface Emittances											
		ϵ = 0.9				ϵ = 0.2				ϵ = 0.05			
		h		*R*		*h*		*R*		*h*		*R*	
Position of Surface	Direction of Heat Flow	Btu / hr-ft²-F	W / m²-C	hr-ft²-F / Btu	m²-C / W	Btu / hr-ft²-F	W / m²-C	hr-ft²-F / Btu	m²-C / W	Btu / hr-ft²-F	W / m²-C	hr-ft²-F / Btu	m²-C / W
Still Air													
Horizontal	Upward	1.63	9.26	0.61	0.11	0.91	5.2	1.10	0.194	0.76	4.3	1.32	0.232
Sloping—45 degrees	Upward	1.60	0.09	0.62	0.11	0.88	5.0	1.14	0.200	0.73	4.1	1.37	0.241
Vertical	Horizontal	1.46	8.29	0.68	0.12	0.74	4.2	1.35	0.238	0.59	3.4	1.70	0.298
Sloping—45 degrees	Downward	1.32	7.50	0.76	0.13	0.60	3.4	1.67	0.294	0.45	2.6	2.22	0.391
Horizontal	Downward	1.08	6.13	0.92	0.16	0.37	2.1	2.70	0.476	0.22	1.3	4.55	0.800
Moving Air													
(any position) Wind is 15 mph or 6.7 m/s (for winter)	Any	6.0	34.0	0.17	0.029								
Wind is 7½ mph or 3.4 m/s (for summer)	Any	4.0	22.7	0.25	0.044								

[a]Conductances are for surfaces of the stated emittance facing virtual blackbody surroundings at the same temperature as the ambient air. Values are based on a surface air temperature difference of 10 deg F and for surface temperature of 70 F.

Source: Adapted by permission from *ASHRAE Handbook, Fundamentals Volume*, 1989.

30

Table 5-3*b* Reflectance and Emittance of Various Surfaces and Effective Emittances of Air Space

			Effective Emittance *E* of Air Space	
Surface	Reflectance in Percent	Average Emittance ϵ	With One Surface Having Emittance ϵ and Other 0.90	With Both Surfaces of Emittance ϵ
Aluminum foil, bright	92–97	0.05	0.05	0.03
Aluminum sheet	80–95	0.12	0.12	0.06
Aluminum coated paper, polished	75–84	0.20	0.20	0.11
Steel, galvanized, bright	70–80	0.25	0.24	0.15
Aluminum paint	30–70	0.50	0.47	0.35
Building materials—wood, paper, glass, masonry, nonmetallic paints	5–15	0.90	0.82	0.82

Source: Adapted by permission from *ASHRAE Handbook, Fundamentals Volume*, 1989.

31

Table 6-1 Solar Data for 21st Day of Each Month[a]

	E_t Equation of Time, min.	d Declination, degrees	A Btu/hr-ft²	B (dimensionless ratios)	C (dimensionless ratios)
Jan	−11.2	−20.0	381.2	0.141	0.103
Feb	−13.9	−10.8	376.4	0.142	0.104
Mar	− 7.5	0.0	369.1	0.149	0.109
Apr	1.1	11.6	358.3	0.164	0.120
May	3.3	20.0	350.7	0.177	0.130
June	− 1.4	23.45	346.3	0.185	0.137
July	− 6.2	20.6	346.6	0.186	0.138
Aug	− 2.4	12.3	351.0	0.182	0.134
Sep	7.5	0.0	360.2	0.165	0.121
Oct	15.4	−10.5	369.7	0.152	0.111
Nov	13.8	−19.8	377.3	0.142	0.106
Dec	1.6	−23.45	381.8	0.141	0.103

[a]*A, B, C* coefficients are based on research by Machler and Iqbal, 1985.

Source: Reprinted by permission from *ASHRAE Cooling and Heating Load Calculation Manual*, 2nd ed., 1992.

[1]Based on a ground reflectance of 0.20.
[2]Underlined Values = monthly maximums.
[3]Boxed Values = Yearly maximums.
[4]For steel sash or no sash, multiply by 1.17.
[5]Altitude correction = +0.7% per 1000 ft. elevation.
[6]Dew point correction:
+7% per 10°F below 67°F D.P.
−7% per 10°F above 67°F D.P.
[7]In southern latitudes in December or January, add 7%.
Reprinted from ASHRAE *Handbook of Fundamentals 1981* by permission of American Society of Heating, Refrigerating & Air-Conditioning Engineers, Inc.

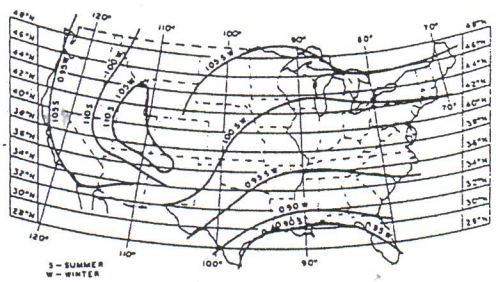

FIGURE B3.1. Estimated atmospheric clearness numbers in the United States for nonindustrial localities.

TABLE B3.2 SOLAR REFLECTANCES OF VARIOUS FOREGROUND SURFACES

Foreground Surface	Incident Angle (deg.)					
	20	30	40	50	60	70
Asphalt parking lot	0.09	0.09	0.10	0.10	0.11	0.12
Concrete, new	0.31	0.31	0.32	0.32	0.33	0.34
Concrete, old	0.22	0.22	0.22	0.23	0.23	0.25
Gravel and bitumen roof	0.14	0.14	0.14	0.14	0.14	0.14
Green grass or other vegetation	0.21	0.22	0.23	0.25	0.28	0.31
Red brick	0.45	0.45	0.45	0.45	0.45	0.45
Sand, dry	0.18	0.18	0.18	0.18	0.18	0.18
Snow	0.75	0.75	0.75	0.75	0.75	0.75
Tar paper (black)	0.07	0.07	0.08	0.08	0.08	0.09
Water	0.06	0.24	0.41	0.59	0.76	0.94

Table 2.3

Shading coefficient SC and solar transmissivity τ for several conventional glazing types, for winter and summer conditions.† (*From ASHRAE, 1989, with permission.*)

Type of glazing	Nominal thickness of each pane		τ	SC	
	mm	in		Winter	Summer
Single glazing					
Clear	3	$\frac{1}{8}$	0.86	1.00	1.00
	6	$\frac{1}{4}$	0.78	0.94	0.95
	10	$\frac{3}{8}$	0.72	0.90	0.92
	13	$\frac{1}{2}$	0.67	0.87	0.88
Heat-absorbing	3	$\frac{1}{8}$	0.64	0.83	0.85
	6	$\frac{1}{4}$	0.46	0.69	0.73
	10	$\frac{3}{8}$	0.33	0.60	0.64
	13	$\frac{1}{2}$	0.24	0.53	0.58
Double glazing					
Clear out, clear in	3	$\frac{1}{8}$	0.71	0.88	0.88
	6	$\frac{1}{4}$	0.61	0.81	0.82
Heat-absorbing out, clear in	6	$\frac{1}{4}$	0.36	0.55	0.58

†See also Table 6.6 for high-performance glazing.

Table 2.4

Data of generic glazing types. *(Adapted from Sweitzer et al. 1987.)*

Type	1/U (m² · K)/W	1/U (h · ft² · °F)/Btu	ϵ	SC	τ_v	K_ϵ
1. Reflective double glazing (bronze)	0.44	2.5	0.40	0.20	0.10	0.5
2. Tinted double glazing (bronze)	0.35	2.0		0.57	0.47	0.8
3. Clear double glazing	0.35	2.0		0.82	0.80	1.0
4. Low-ϵ double glazing, bronze	0.53	3.0	0.15	0.42	0.41	1.0
5. Low-ϵ double glazing, clear	0.53	3.0	0.15	0.66	0.72	1.1
6. Tinted double glazing, green	0.35	2.0		0.56	0.67	1.2
7. Low-ϵ single glazed, green	0.16	0.9	0.35	0.53	0.65	1.2
8. Triple glazing, green: two panes with low-ϵ coated polyester film in airspace	0.63	3.6	0.15	0.47	0.58	1.2
9. Low-ϵ double glazing, green	0.53	3.0	0.15	0.41	0.61	1.5

Notes: ASHRAE winter conditions; ϵ = emissivity on coated surface (= surface number 2, counted from outside to inside), all other surfaces uncoated (emissivity = 0.84); SC = shading coefficient; τ_v = transmissivity for visible radiation; $K_\epsilon = \tau_v/SC$ is proportional to the luminous efficacy of transmitted daylight. The glazings are numbered in order of increasing K_ϵ.

CONFIDENTIAL

Table 3.1 Heating and Wind Design Conditions—World Locations

Station	WMO#	Lat.	Long.	Elev. m	StdP kPa	Dates	Heating DB 99.6%	Heating DB 99%	Extreme Wind Speed 1%	Extreme Wind Speed 2.5%	Extreme Wind Speed 5%	Coldest Month WS/MDB 0.4% WS	0.4% MDB	1% WS	1% MDB	MWS/MWD to DB 99.6% MWS	99.6% PWD	0.4% MWS	0.4% PWD	Annual Extreme Daily Mean DB Max	Mean DB Min	StdD DB Max	StdD DB Min
Khamis Mushayt	411140	18.30 N	42.80 E	2054	78.96	8293	4.5	6.1	9.2	8.2	7.2	9.7	16.1	8.9	16.1	0.8	150	4.5	30	36.2	1.8	3.8	2.3
Makkah	410300	21.48 N	39.83 E	310	97.66	8293	15.2	16.8	6.4	5.4	4.8	6.7	25.1	5.6	25.4	1.6	20	3.4	300	47.5	11.7	1.1	2.4
Qasim	404050	26.30 N	43.77 E	650	93.76	8293	2.7	4.0	9.3	8.1	7.0	8.8	15.8	7.4	13.8	0.8	30	3.7	90	45.9	−0.1	2.1	1.8
Ratha	403620	29.63 N	43.48 E	447	96.07	8293	0.4	1.9	11.3	9.9	8.8	10.8	12.1	9.7	13.2	1.8	270	4.0	300	46.3	−2.6	1.5	1.5
Riyadh	404380	24.72 N	46.72 E	612	94.19	8293	5.1	6.8	9.9	8.5	7.5	9.2	15.6	8.0	15.5	1.6	320	4.8	360	46.0	1.9	0.8	1.5
Tabuk	403750	28.37 N	36.63 E	770	92.41	8293	1.1	2.6	11.0	9.1	7.5	11.0	15.5	9.0	15.4	1.1	110	4.5	270	41.8	−1.3	1.2	1.3
Turayf	403560	31.68 N	38.67 E	813	91.93	8293	−1.9	−0.1	11.2	9.9	8.8	11.4	7.7	10.0	7.8	2.8	270	4.2	270	40.9	−4.0	1.3	1.9
Yanbu'al Bahr	404390	24.15 N	38.07 E	1	101.31	8293	10.9	12.1	11.4	10.2	9.2	11.0	22.1	9.8	22.5	1.5	10	7.7	270	45.8	8.6	1.0	1.1
SENEGAL																							
Dakar	616410	14.73 N	17.50 W	24	101.04	8293	16.2	16.8	10.3	9.4	8.5	10.3	20.8	9.4	20.8	4.5	360	4.3	360	37.9	12.3	2.2	4.3
Saint Louis	616000	16.05 N	16.45 W	4	101.28	8293	15.3	16.2	10.1	9.0	8.2	10.2	24.6	8.8	24.7	3.2	40	5.0	80	42.4	11.5	1.6	2.0
Tambacounda	616870	13.77 N	13.68 W	50	100.73	8293	17.0	18.2	7.5	6.5	5.6	7.7	27.9	7.2	27.3	1.5	80	2.8	100	43.1	11.9	1.8	3.1
Ziguinchor	616950	12.55 N	16.27 W	23	101.05	8293	16.2	17.2	6.3	5.2	4.4	6.8	27.5	5.5	27.2	0.6	40	2.8	60	41.3	12.5	0.5	4.1
SINGAPORE																							
Singapore	486980	1.37 N	103.98 E	16	101.13	8293	22.8	23.1	8.0	7.2	6.3	8.2	28.5	7.6	28.7	2.0	330	4.7	30	33.9	18.3	1.1	6.7

Cooling and Dehumidification Design Conditions—World Locations

Station	Cooling DB/MWB 0.4% DB	0.4% MWB	1% DB	1% MWB	2% DB	2% MWB	WB/MDB 0.4% WB	0.4% MDB	1% WB	1% MDB	2% WB	2% MDB	DP/MDB and HR 0.4% DP	0.4% HR	0.4% MDB	1% DP	1% HR	1% MDB	2% DP	2% HR	2% MCDB	Range of DB
Khamis Mushayt	31.1	13.8	30.6	13.7	30.0	13.4	19.0	24.1	18.2	23.3	17.6	23.1	17.2	15.9	21.8	16.6	15.2	21.5	15.9	14.6	21.0	12.3
Makkah	44.8	24.5	43.8	24.3	42.8	24.0	28.0	39.8	27.2	38.9	26.6	38.3	25.1	21.0	33.9	24.2	19.9	34.3	23.5	19.0	34.3	15.1
Qasim	43.5	19.4	42.8	18.5	41.8	18.0	23.6	35.9	21.2	35.6	19.9	36.8	19.9	15.8	29.1	17.0	13.1	26.4	15.1	11.6	23.7	16.3
Ratha	43.9	20.5	42.8	20.0	41.5	19.4	22.0	40.0	21.2	39.8	20.5	39.5	17.0	12.8	24.1	15.9	11.9	22.3	14.2	10.7	23.8	16.5
Riyadh	44.0	18.0	43.1	17.8	42.2	17.7	20.6	35.6	19.7	36.3	19.0	35.6	16.9	13.0	22.9	15.6	11.9	22.1	14.1	10.8	22.2	14.0
Tabuk	40.1	17.8	39.0	17.4	38.0	17.1	20.0	35.2	19.2	34.9	18.5	34.6	14.8	11.5	24.9	13.4	10.5	24.8	12.8	10.1	24.4	14.8
Turayf	38.9	17.7	37.3	17.0	36.1	16.9	20.2	33.6	19.1	32.8	18.3	32.4	15.8	12.4	25.6	14.2	11.2	24.0	13.2	10.4	23.1	15.2
Yanbu'al Bahr	42.7	24.2	41.2	24.1	39.9	24.2	28.6	35.7	27.8	35.1	27.2	34.6	27.0	22.7	32.2	26.1	21.5	31.4	25.2	20.3	31.1	14.3
SENEGAL																						
Dakar	31.8	23.4	31.0	24.9	30.2	25.1	27.0	30.2	26.6	29.5	26.2	29.0	26.2	21.7	28.8	26.0	21.4	28.6	25.5	20.8	28.4	5.4
Saint Louis	38.1	20.6	36.3	20.3	34.6	20.7	27.9	31.1	27.5	30.6	27.1	30.1	27.1	22.8	29.7	26.7	22.3	29.4	26.3	21.8	29.1	9.0
Tambacounda	40.9	21.3	40.2	21.1	39.3	21.0	27.1	32.5	26.7	31.8	26.3	31.3	25.9	21.4	29.2	25.5	20.8	28.8	25.1	20.3	28.6	12.6
Ziguinchor	38.2	22.4	36.9	21.8	35.7	22.4	28.3	32.5	27.9	32.0	27.5	31.6	27.2	23.0	31.3	26.7	22.3	30.6	26.4	21.9	30.0	15.4
SINGAPORE																						
Singapore	33.0	25.9	32.2	25.9	32.0	25.9	27.2	30.9	27.1	30.7	26.8	30.3	26.2	21.7	28.9	26.2	21.7	28.8	26.1	21.5	28.7	6.3

Table 3.2 Latent Load

Nominal heat gain values from occupants. (*Based on ASHRAE, 1989a.*)

Activity	Total		Sensible		Latent	
	Btu/h	W	Btu/h	W	Btu/h	W
Seated at rest	340	100	240	70	100	30
Seated, light office work	410	120	255	75	150	45
Standing or walking slowly	495	145	255	75	240	70
Light physical work	850	250	310	90	545	160
Heavy physical work	1600	470	630	185	970	285

Typical heat gain rates for several kinds of equipment. (*Based on ASHRAE, 1989, Norford et al., 1989, and updates.*)

Equipment	Heat gain		Comments
	Btu/h	W	
Television set	170–340	50–100	
Refrigerator	340–680	100–200	Recent models more efficient
Personal computer (desktop)	170–680	50–200	Almost independent of use while turned on
Impact printer	34–100	10–30 standby	Increases about twofold during printing
Laser printer	510	150 standby	Increases about twofold during printing
Copier	500–1000	150–300 standby	Increases about twofold during printing

Note that measured values are often less than half of the nameplate rating.

CONFIDENTIAL

cooling load temp. diff.

Table 3.3

CLTDs for flat roofs. (*From ASHRAE, 1989, with permission.*)

For construction details see Table A7.2. The units are degrees fahrenheit; to convert to kelvins, multiply by $\frac{5}{9}$

Roof no.	Description of construction	Weight, lb/ft²	U value, Btu/(h·ft²·°F)	Solar time, h 1	2	3	4	5	6	7	8	9	10	11	12	13	14	15	16	17	18	19	20	21	22	23	24	Hour of max. CLTD	Min. CLTD	Max. CLTD	Difference CLTD
	Without suspended ceiling																														
1	Steel sheet with 1-in (or 2-in) insulation	7 (8)	0.213 (0.124)	1	−2	−3	−3	−5	−3	6	19	34	49	61	71	78	79	77	70	59	45	30	18	12	8	5	3	14	−5	79	84
2	1-in wood with 1-in insulation	8	0.170	6	3	0	−1	−3	−3	−2	4	14	27	39	52	62	70	74	74	70	62	51	38	28	20	14	9	16	−3	74	77
3	4-in lightweight concrete	18	0.213	9	5	2	0	−2	−3	−3	1	9	20	32	44	55	64	70	73	71	66	57	45	34	25	18	13	16	−3	73	76
4	2-in heavyweight concrete with 1-in (or 2-in) insulation	29	0.206 (0.122)	12	8	5	3	0	−1	−1	3	11	20	30	41	51	59	65	66	66	62	54	45	36	29	22	17	16	−1	67	68
5	1-in wood with 2-in insulation	9	0.109	3	0	−3	−4	−5	−7	−6	−3	5	16	27	39	49	57	63	64	62	57	48	37	26	18	11	7	16	−7	64	71
6	6-in lightweight concrete	24	0.158	22	17	13	9	6	3	1	1	3	7	15	23	33	43	51	58	62	64	62	57	50	42	35	28	18	1	64	63
7	2.5-in wood with 1-in insulation	13	0.130	29	24	20	16	13	10	7	6	6	9	13	20	27	34	42	48	53	55	56	54	49	44	39	34	19	6	56	50
8	8-in lightweight concrete	31	0.126	35	30	26	22	18	14	11	9	7	7	9	13	19	25	33	39	46	50	53	54	53	49	45	40	20	7	54	47
9	4-in heavyweight concrete with 1-in (or 2-in) insulation	52 (52)	0.200 (0.120)	25	22	18	15	12	9	8	8	10	14	20	26	33	40	46	50	53	53	52	48	43	38	34	30	18	8	53	45
10	2.5-in wood with 2-in insulation	13	0.093	30	26	23	19	16	13	10	9	8	9	13	17	23	29	36	41	46	49	51	50	47	43	39	35	19	8	51	43
11	Roof terrace system	75	0.106	34	31	28	25	22	19	16	14	13	13	15	18	22	26	31	36	40	44	45	46	45	43	40	37	20	13	46	33
12	6-in heavyweight concrete with 1-in (or 2-in) insulation	75 (75)	0.192 (0.117)	31	28	25	22	20	17	15	14	14	16	18	22	26	31	36	40	43	45	45	44	42	40	37	34	19	14	45	31
13	4-in wood with 1-in (or 2-in) insulation	17 (18)	0.106 (0.078)	38	36	33	30	28	25	22	20	18	17	16	17	18	21	24	28	32	36	39	41	43	43	42	40	22	16	43	27

CONFIDENTIAL

(*Continued*) Table 3.3

Roof no.	Description of construction	Weight, lb/ft²	U value, Btu/(h·ft²·°F)	Solar time, h 1	2	3	4	5	6	7	8	9	10	11	12	13	14	15	16	17	18	19	20	21	22	23	24	Hour of max. CLTD	Min. CLTD	Max. CLTD	Difference CLTD
	With suspended ceiling																														
1	Steel sheet with 1-in (or 2-in) insulation	9 (10)	0.134 (0.092)	2	0	−2	−3	−4	−4	−1	9	23	37	50	62	71	77	78	74	67	56	42	28	18	12	8	5	15	−4	78	82
2	1-in wood with 1-in insulation	10	0.115	20	15	11	8	5	3	2	3	7	13	21	30	40	48	55	60	62	61	58	51	44	37	30	25	17	2	62	60
3	4-in lightweight concrete	20	0.134	19	14	10	7	4	2	0	0	4	10	19	29	39	48	56	62	65	64	61	54	46	38	30	24	17	0	65	65
4	2-in heavyweight concrete with 1-in	30	0.131	28	25	23	20	17	15	13	13	14	16	20	25	30	35	39	43	46	47	46	44	41	38	35	32	18	13	47	34
5	1-in wood with 2-in insulation	10	0.083	25	20	16	13	10	7	5	5	7	12	18	25	33	41	48	53	57	57	56	52	46	40	34	29	18	5	57	52
6	6-in lightweight concrete	26	0.109	32	28	23	19	16	13	10	8	7	8	11	16	22	29	36	42	48	52	54	54	51	47	42	37	20	7	54	47
7	2.5-in wood with 1-in insulation	15	0.096	34	31	29	26	23	21	18	16	15	15	16	18	21	25	30	34	38	41	43	44	44	42	40	37	21	15	44	29
8	8-in lightweight concrete	33	0.093	39	36	33	29	26	23	20	18	15	14	14	15	17	20	25	29	34	38	42	45	46	45	44	42	21	14	46	32
9	4-in heavyweight concrete with 1-in (or 2-in) insulation	53 (54)	0.128 (0.090)	30	29	27	26	24	22	21	20	20	21	22	24	27	29	32	34	36	38	38	38	37	36	34	33	19	20	38	18
10	2.5-in wood with 2-in insulation	15	0.072	35	33	30	28	26	24	22	20	18	18	18	20	22	25	28	32	35	38	40	41	41	40	39	37	21	18	41	23
11	Roof terrace system	77	0.082	30	29	28	27	26	25	24	23	22	22	22	23	23	25	26	28	29	31	32	33	33	33	33	32	22	22	33	11
12	6-in heavyweight concrete with 1-in (or 2-in) insulation	77 (77)	0.125 (0.088)	29	28	27	26	25	24	23	22	21	21	22	23	25	26	28	30	32	33	34	34	34	33	32	31	20	21	34	13
13	4-in wood with 1-in (or 2-in) insulation	19 (20)	0.082 (0.064)	35	34	33	32	31	29	27	26	24	23	22	21	22	22	24	25	27	30	32	34	35	36	37	36	23	21	37	16

Table 3.3 (continue).

Wall construction details for CLTDs of Table A7.5. (*From ASHRAE, 1989, with permission.*)

For definition of layer codes and thermal properties, see Table A7.6

Group No.	Description of construction	Weight, lb/ft²	*U* value, Btu/(h · ft² · °F)	Code number of layers
4-in face brick + brick				
C	Airspace + 4-in face brick	83	0.358	A0, A2, B1, A2, E0
D	4-in common brick	90	0.415	A0, A2, C4, E1, E0
C	1-in insulation or airspace + 4-in common brick	90	0.174–0.301	A0, A2, C4, B1/B2, E1, E0
B	2-in insulation + 4-in common brick	88	0.111	A0, A2, B3, C4, E1, E0
B	8-in common brick	130	0.302	A0, A2, C9, E1, E0
A	Insulation or airspace + 8-in common brick	130	0.154–0.243	A0, A2, C9, B1/B2, E1, E0
4-in face brick + (lightweight or heavyweight concrete block)				
E	4-in block	62	0.319	A0, A2, C2, E1, E0
D	Airspace or insulation + 4-in block	62	0.153–0.246	A0, A2, C2, B1/B2, E1, E0
D	8-in block	70	0.274	A0, A2, C7, A6, E0
C	Airspace or 1-in insulation + 6-in or 8-in block	73–89	0.221–0.275	A0, A2, B1, C7/C8, E1, E0
B	2-in Insulation + 8-in block	89	0.096–0.107	A0, A2, B3, C7/C8, E1, E0
Heavyweight concrete wall + (finish)				
E	4-in concrete	63	0.585	A0, A1, C5, E1, E0
D	4-in concrete + 1-in or 2-in insulation	63	0.119–0.200	A0, A1, C5, B2/B3, E1, E0
C	2-in insulation + 4-in concrete	63	0.119	A0, A1, B6, C5, E1, E0
C	8-in concrete	109	0.490	A0, A1, C10, E1, E0
B	8-in concrete + 1-in or 2-in insulation	110	0.115–0.187	A0, A1, C10, B5/B6, E1, E0
A	2-in insulation + 8-in concrete	110	0.115	A0, A1, B3, C10, E1, E0
B	12-in concrete	156	0.421	A0, A1, C11, E1, E0
A	12-in concrete + insulation	156	0.113	A0, C11, B6, A6, E0
Metal curtain wall				
G	With/without airspace + 1-in/2-in/3-in insulation	5–6	0.091–0.230	A0, A3, B5/B6/B12, A3, E0
Frame wall				
G	1-in to 3-in Insulation	16	0.081–0.178	A0, A1, B1, B2/B3/B4, E1, E0

CONFIDENTIAL

Table 3.4

CLTDs for sunlighted walls for north latitudes. (*From ASHRAE, 1989, with permission.*)

For construction details see Table A7.4. The units are degrees fahrenheit; to convert to kelvins, multiply by $\frac{5}{9}$

Wall facing	Solar time, h																								Hour of max. CLTD	Min. CLTD	Max. CLTD	Difference CLTD
	0100	0200	0300	0400	0500	0600	0700	0800	0900	1000	1100	1200	1300	1400	1500	1600	1700	1800	1900	2000	2100	2200	2300	2400				
Group A walls																												
N	14	14	14	13	13	13	12	12	11	11	10	10	10	10	10	10	11	11	12	12	13	13	14	14	2	10	14	4
NE	19	19	19	18	17	17	16	15	15	15	15	15	16	16	17	18	18	18	19	19	20	20	20	20	22	15	20	5
E	24	24	23	23	22	21	20	19	19	18	19	19	20	21	22	23	24	24	25	25	25	25	25	25	22	18	25	7
SE	24	23	23	22	21	20	20	19	18	18	18	18	18	19	20	21	22	23	23	24	24	24	24	24	22	18	24	6
S	20	20	19	19	18	18	17	16	16	15	14	14	14	14	14	15	16	17	18	19	19	20	20	20	23	14	20	6
SW	25	25	25	24	24	23	22	21	20	19	19	18	17	17	17	17	18	19	20	22	23	24	25	25	24	17	25	8
W	27	27	26	26	25	24	24	23	22	21	20	19	19	18	18	18	18	19	20	22	23	25	26	26	1	18	27	9
NW	21	21	21	20	20	19	19	18	17	16	16	15	15	14	14	14	15	15	16	17	18	19	20	21	1	14	21	7
Group B walls																												
N	15	14	14	13	12	11	11	10	9	9	9	8	8	9	9	10	11	12	13	14	14	15	15	15	24	8	15	7
NE	19	18	17	16	15	14	13	12	12	13	14	15	16	17	18	19	19	20	20	21	21	21	20	20	21	12	21	9
E	23	22	21	20	18	17	16	15	15	15	17	19	21	22	24	25	26	26	27	27	26	26	25	24	20	15	27	12
SE	23	22	21	20	18	17	16	15	14	14	15	16	18	20	21	23	24	25	26	26	26	26	25	24	21	14	26	12
S	21	20	19	18	17	15	14	13	12	11	11	11	11	12	14	15	17	19	20	21	22	22	22	21	23	11	22	11
SW	27	26	25	24	22	21	19	18	16	15	14	14	13	13	14	15	17	20	22	25	27	28	28	28	24	13	28	15
W	29	28	27	26	24	23	21	19	18	17	16	15	14	14	14	15	17	19	22	25	27	29	29	30	24	14	30	16
NW	23	22	21	20	19	18	17	15	14	13	12	12	12	11	12	12	13	15	17	19	21	22	23	23	24	11	23	9
Group C walls																												
N	15	14	13	12	11	10	9	8	8	7	7	8	8	9	10	12	13	14	15	16	17	17	17	16	22	7	17	10
NE	19	17	16	14	13	11	10	10	11	13	15	17	19	20	21	22	22	23	23	23	23	22	21	20	20	10	23	13
E	22	21	19	17	15	14	12	12	14	16	19	22	26	27	29	29	30	30	30	29	28	27	26	24	18	12	30	18
SE	22	21	19	17	15	14	12	12	12	13	16	19	22	24	26	28	29	29	29	29	28	27	26	24	19	12	29	17
S	21	19	18	16	15	13	12	10	9	9	9	10	11	14	17	20	22	24	25	26	25	25	24	22	20	9	26	17
SW	29	27	25	22	20	18	16	15	13	12	11	11	11	13	15	18	22	26	29	32	33	33	32	31	22	11	33	22
W	31	29	27	25	22	20	18	16	14	13	12	11	12	13	14	16	20	24	29	32	35	35	35	33	22	12	35	23
NW	25	23	21	20	18	16	14	13	11	10	10	10	10	11	12	13	15	18	22	25	27	27	27	26	22	10	27	17

CONFIDENTIAL

(Continued) Table 3.4

Wall facing	Solar time, h																								Hour of max. CLTD	Min. CLTD	Max. CLTD	Difference CLTD
	0100	0200	0300	0400	0500	0600	0700	0800	0900	1000	1100	1200	1300	1400	1500	1600	1700	1800	1900	2000	2100	2200	2300	2400				
Group D walls																												
N	15	13	12	10	9	7	6	6	6	6	6	7	8	10	12	13	15	17	18	19	19	19	18	16	21	6	19	13
NE	17	15	13	11	10	8	7	8	10	14	17	20	22	23	23	24	24	25	25	24	23	22	20	18	19	7	25	18
E	19	17	15	13	11	9	8	9	12	17	22	27	30	32	33	33	32	32	31	30	28	26	24	22	18	8	33	25
SE	20	17	15	13	11	10	8	8	10	13	17	22	26	29	31	32	32	32	31	30	28	26	24	22	17	8	32	24
S	19	17	15	13	11	9	8	7	8	8	7	9	12	16	20	24	27	29	29	29	27	26	24	22	19	8	29	23
SW	28	25	22	19	16	14	12	10	9	8	8	8	10	12	16	21	27	32	36	38	38	37	34	31	21	8	38	30
W	31	27	24	21	18	15	13	11	10	9	9	9	10	11	14	18	24	30	36	40	41	40	38	34	21	9	41	32
NW	25	22	19	17	14	12	10	9	8	7	7	8	9	10	12	14	18	22	27	31	32	32	30	27	22	7	32	25
Group E walls																												
N	12	10	8	7	5	4	3	4	5	6	7	9	11	13	15	17	19	20	21	23	20	18	16	14	20	3	22	19
NE	13	11	9	7	6	4	5	9	15	20	24	25	25	26	26	26	26	26	25	24	22	19	17	15	18	4	26	22
E	14	12	10	8	6	5	6	11	18	26	33	38	38	37	36	34	33	32	30	28	25	22	20	17	13	5	38	33
SE	15	12	10	8	7	5	5	8	12	19	25	31	35	37	37	36	34	33	31	28	26	23	20	17	15	5	37	32
S	15	12	10	8	7	5	4	3	4	5	9	13	19	24	29	32	34	33	31	29	26	23	20	17	17	3	34	31
SW	22	18	15	12	10	8	6	5	5	6	7	9	12	18	24	32	38	43	45	44	40	35	30	26	19	5	45	40
W	25	21	17	14	11	9	7	6	6	6	7	9	11	14	20	27	36	43	49	49	45	40	34	29	20	6	49	43
NW	20	17	14	11	9	7	6	5	5	5	6	8	10	13	16	20	26	32	37	38	36	32	28	24	20	5	38	33
Group F walls																												
N	8	6	5	3	2	1	2	4	6	7	9	11	14	17	19	21	22	23	24	23	20	16	13	11	19	1	23	23
NE	9	7	5	3	2	1	5	14	23	28	30	29	28	27	27	27	27	28	24	22	19	16	13	11	11	1	30	29
E	10	7	6	4	3	2	6	17	28	38	44	45	43	39	36	34	32	30	27	24	21	17	15	12	12	2	45	43
SE	10	7	6	4	3	2	4	10	19	28	36	41	43	42	39	36	34	31	28	25	21	18	15	12	13	2	43	41
S	10	8	6	4	3	2	1	1	3	7	13	20	27	34	38	39	38	35	31	28	22	18	15	12	18	1	39	38
SW	15	11	9	6	5	3	2	2	4	5	8	13	17	20	35	44	50	53	52	45	37	28	23	18	18	2	53	46
W	17	13	10	7	5	4	3	3	4	6	8	11	14	20	28	39	48	57	60	54	43	34	27	21	19	3	60	57
NW	14	10	8	6	4	3	2	2	3	5	8	10	13	15	21	27	35	42	46	43	35	28	22	18	19	2	48	44
Group G walls																												
N	3	2	1	0	−1	2	7	8	9	12	15	18	21	23	24	24	25	26	22	15	11	9	7	5	18	−1	26	27
NE	3	2	1	0	−1	9	27	36	38	35	30	26	26	27	27	28	25	22	18	14	11	9	7	5	9	−1	39	40
E	4	2	1	0	−1	11	31	47	54	55	50	40	33	31	30	29	27	24	19	15	12	10	8	6	10	−1	55	56
SE	4	2	1	0	−1	5	18	32	42	49	51	48	42	36	32	30	27	24	19	15	12	10	8	6	11	−1	51	52
S	4	2	1	0	−1	0	1	5	12	22	31	39	45	46	43	37	31	25	20	15	12	10	8	5	14	−1	46	47
SW	5	4	3	1	0	0	2	6	8	12	18	28	38	50	59	63	61	52	37	24	17	13	10	8	16	0	63	63
W	6	5	3	2	1	1	2	5	8	11	15	19	27	41	56	67	72	67	48	29	20	15	11	8	17	1	72	71
NW	5	3	2	1	0	0	2	5	8	11	15	18	21	27	37	47	55	55	41	25	17	13	10	7	18	0	65	55

APRIL 2010

CONFIDENTIAL

Table 3.6

CLTD correction for latitude and months, applied to walls and roofs. (*From ASHRAE, 1989, with permission.*)

The units are degrees fahrenheit; to convert to kelvins, multiply by $\frac{5}{9}$

CLTD corr.

Lat.	Month	N	NE/ NW	E/ W	SE/ SW	S	HOR — roof
0	Dec	−3	−5	−2	3	9	−1
	Jan/Nov	−3	−4	−1	2	7	−1
	Feb/Oct	−3	−2	−1	0	0	0
	Mar/Sep	−3	1	−1	−3	−8	0
	Apr/Aug	5	3	−2	−6	−8	−2
	May/Jul	(10)	5	−3	−8	−8	(4) — roof
	Jun	12	5	−3	−9	−8	−5
8	Dec	−4	−6	−3	4	12	−5
	Jan/Nov	−3	−6	−2	3	10	−4
	Feb/Oct	−3	−3	−1	1	4	−1
	Mar/Sep	−3	−1	−1	−2	−4	0
	Apr/Aug	2	2	−1	−5	−7	−1
	May/Jul	7	4	−2	−7	−7	−2
	Jun	9	4	−2	−8	−7	−2
16	Dec	−4	−8	−4	4	13	−9
	Jan/Nov	−4	−7	−4	4	12	−7
	Feb/Oct	−3	−5	−2	2	7	−4
	Mar/Sep	−3	−2	−1	0	0	−1
	Apr/Aug	−1	−1	−1	−3	−6	0
	May/Jul	4	3	−1	−5	−7	0
	Jun	6	4	−1	−6	0	−7
24	Dec	−5	−9	−7	3	13	−13
	Jan/Nov	−4	−8	−6	9	13	−11
	Feb/Oct	−4	−6	−3	3	10	−7
	Mar/Sep	−3	−3	−1	1	4	−3
	Apr/Aug	−2	0	−1	−1	−3	0
	May/Jul	1	2	0	−3	−6	1
	Jun	3	3	0	−4	−6	1
32	Dec	−5	−10	−8	2	12	−17
	Jan/Nov	−5	−9	−8	−4	9	12
	Feb/Oct	−4	−7	−4	4	11	−10
	Mar/Sep	−3	−4	−2	3	7	−5
	Apr/Aug	−2	−1	0	0	1	−1
	May/Jul	1	1	0	−1	−3	1
	Jun	1	2	0	−2	−4	2
40	Dec	−6	−10	−10	0	10	−21
	Jan/Nov	−5	−10	−9	1	11	−19
	Feb/Oct	−5	−8	−6	3	12	−14
	Mar/Sep	−4	−5	−3	4	10	−8
	Apr/Aug	−2	−2	0	2	4	−3
	May/Jul	0	0	0	0	1	1
	Jun	1	1	1	0	−1	2
48	Dec	−6	−11	−13	−3	6	−25
	Jan/Nov	−6	−11	−11	−1	8	−24
	Feb/Oct	−5	−10	−8	1	11	−18
	Mar/Sep	−4	−6	−4	4	11	−11
	Apr/Aug	−3	−3	−1	4	7	−5
	May/Jul	0	0	1	3	4	0
	Jun	1	2	2	2	3	2
56	Dec	−7	−12	−16	−9	−3	−28
	Jan/Nov	−6	−11	−14	−6	2	−27
	Feb/Oct	−6	−10	−10	0	9	−22
	Mar/Sep	−5	−7	−5	4	12	−15
	Apr/Aug	−3	−4	−1	5	9	−8
	May/Jul	0	0	2	5	7	−2
	Jun	2	2	3	4	6	1

Table 3.7

CLTDs for glass. (*From ASHRAE, 1989, with permission.*)

The units are degrees fahrenheit; to convert to kelvins, multiply by $\frac{5}{9}$

Solar time, h	CLTD, °F	Solar time, h	CLTD, °F
0100	1	1300	12
0200	0	1400	13
0300	−1	1500	14
0400	−2	1600	14
0500	−2	1700	13
0600	−2	1800	12
0700	−2	1900	10
0800	0	2000	8
0900	2	2100	6
1000	4	2200	4
1100	7	2300	3
1200	9	2400	2

Corrections: The values in the table were calculated for an inside temperature of 78°F and an outdoor maximum temperature of 95°F with an outdoor daily range of 21°F. The table remains approximately correct for other outdoor maximums 93 to 102°F and other outdoor daily ranges 16 to 34°F, provided the outdoor daily average temperature remains approximately 85°F. If the room air temperature is different from 78°F and/or the outdoor daily average temperature is different from 85°F, the following rules apply: (a) For room air temperature less than 78°F, subtract the difference. (*b*) For outdoor daily average temperature less than 85°F, subtract the difference between 85°F and the daily average temperature; if greater than 85°F, add the difference.

$$\text{Corr. CLTD} = \text{CLTD} + (25.5 - t_r) + (t_m - 29.4)$$

CONFIDENTIAL

Table 3.8 (SHGF)

Maximum solar heat gain factor [the quantity *FI* of Eq. (6.54)] for sunlighted glass, north latitudes. (*From ASHRAE, 1989, with permission.*)

The units are Btu/(h · ft²); to convert to W/m², multiply by 3.155

0°N

	N	NE/NW	E/W	SE/SW	S	HOR
Jan	34	88	234	235	118	296
Feb	36	132	245	210	67	306
Mar	38	170	242	170	38	303
Apr	71	193	221	118	37	284
May	113	203	201	80	37	265
Jun	129	206	191	66	37	255
Jul	115	201	195	77	38	260
Aug	75	187	212	112	38	276
Sep	40	163	231	163	40	293
Oct	37	129	236	202	66	299
Nov	35	88	230	230	117	293
Dec	34	71	226	240	138	288

8°N

	N	NE/NW	E/W	SE/SW	S	HOR
Jan	32	71	224	242	162	275
Feb	34	114	239	219	110	294
Mar	37	156	241	184	55	300
Apr	44	184	225	134	39	289
May	74	198	209	97	38	277
Jun	90	200	200	82	39	269
Jul	77	195	204	93	39	272
Aug	47	179	216	128	41	282
Sep	38	149	230	176	56	290
Oct	35	112	231	211	108	288
Nov	33	71	220	233	160	273
Dec	31	55	215	247	179	265

32°N

	N (Shade)	NE/NW	E/W	SE/SW	S	HOR
Jan	24	29	175	249	246	176
Feb	27	65	205	248	221	217
Mar	32	107	227	227	176	252
Apr	36	146	227	187	115	271
May	38	170	220	155	74	277
Jun	44	176	214	139	60	276
Jul	40	167	215	150	72	273
Aug	37	141	219	181	111	265
Sep	33	103	215	218	171	244
Oct	28	63	195	239	215	213
Nov	24	29	173	245	243	175
Dec	22	22	162	246	252	158

40°N

	N (Shade)	NE/NW	E/W	SE/SW	S	HOR
Jan	20	20	154	241	254	133
Feb	24	50	186	246	241	180
Mar	29	93	218	236	206	223
Apr	34	140	224	203	154	252
May	37	165	220	175	113	265
Jun	48	172	216	161	95	267
Jul	38	163	216	170	109	262
Aug	35	135	216	196	149	247
Sep	30	87	203	225	200	215
Oct	25	49	180	238	234	177
Nov	20	20	151	237	250	132
Dec	18	18	135	232	253	113

(Continued) Table 3.8

16°N

	N	NE/ NW	E/ W	SE/ SW	S	HOR
Jan	30	55	210	251	199	248
Feb	33	96	231	233	154	275
Mar	35	140	239	197	93	291
Apr	39	172	227	150	45	289
May	52	189	215	115	41	282
Jun	66	194	207	99	41	277
Jul	55	187	210	111	42	277
Aug	41	168	219	143	46	282
Sep	36	134	227	191	93	282
Oct	33	95	223	225	150	270
Nov	30	55	206	247	196	246
Dec	29	41	198	254	212	234

24°N

	N	NE/ NW	E/ W	SE/ SW	S	HOR
Jan	27	41	190	253	227	214
Feb	30	80	220	243	192	249
Mar	34	124	234	214	137	275
Apr	37	159	228	169	75	283
May	43	178	218	132	46	282
Jun	55	184	212	117	43	279
Jul	45	176	213	129	46	278
Aug	38	156	220	162	72	277
Sep	35	119	222	206	134	266
Oct	31	79	211	235	187	244
Nov	27	42	187	249	224	213
Dec	26	29	180	247	237	199

48°N

	N (Shade)	NE/ NW	E/ W	SE/ SW	S	HOR
Jan	15	15	118	216	245	85
Feb	20	36	168	242	250	138
Mar	26	80	204	239	228	188
Apr	31	132	219	215	186	226
May	35	158	218	192	150	247
Jun	46	165	215	180	134	252
Jul	37	156	214	187	146	244
Aug	33	128	211	208	180	223
Sep	27	72	191	228	220	182
Oct	21	35	161	233	242	136
Nov	15	15	115	212	240	85
Dec	13	13	91	195	233	65

56°N

	N (Shade)	NE/ NW	E/ W	SE/ SW	S	HOR
Jan	10	10	74	169	205	40
Feb	16	21	139	223	244	91
Mar	22	65	185	238	241	149
Apr	28	123	211	225	210	195
May	36	149	215	206	181	222
Jun	53	160	213	196	168	231
Jul	37	147	211	201	177	221
Aug	30	119	203	215	203	193
Sep	23	58	171	227	231	144
Oct	16	20	132	213	234	97
Nov	10	10	72	165	200	49
Dec	7	7	47	135	171	23

Table 3.9

Maximum solar heat gain factor [the quantity *FI* of Eq. (6.54)] for externally shaded glass (based on ground reflectance 0.2). (*From ASHRAE, 1989, with permission.*)

The units are Btu/(h · ft²); to convert to W/m², multiply by 3.155

	N	NE/ NW	E/ W	SE/ SW	S	(All lat.) HOR
Jan	31	31	34	37	38	16
Feb	34	34	36	38	39	16
Mar	6	37	39	40	39	19
Apr	40	41	42	41	40	24
May	43	45	45	41	40	28
Jun	45	47	46	41	40	31
Jul	45	46	47	42	41	31
Aug	42	43	46	43	42	28
Sep	37	38	41	42	41	23
Oct	34	34	38	40	40	19
Nov	32	32	34	38	39	17
Dec	30	30	32	36	37	15

Use for latitudes 0 to 24 deg.

For latitudes greater than 24, use north orientation, Table A7.9.

For horizontal glass in shade, use the tabulated values for all latitudes.

CONFIDENTIAL

Table 3.10

Cooling load factors for glass without interior shading. (*From ASHRAE, 1989, with permission.*)

Fenestration facing	Room construction	Solar time, h																							
		1	2	3	4	5	6	7	8	9	10	11	12	13	14	15	16	17	18	19	20	21	22	23	24
	L	0.17	0.14	0.11	0.09	0.08	0.33	0.42	0.48	0.56	0.63	0.71	0.76	0.80	0.82	0.82	0.79	0.75	0.84	0.61	0.48	0.38	0.31	0.25	0.20
N	M	0.23	0.20	0.18	0.16	0.14	0.34	0.41	0.46	0.53	0.59	0.65	0.70	0.73	0.75	0.76	0.74	0.75	0.79	0.61	0.50	0.42	0.36	0.31	0.27
(Shaded)	H	0.25	0.23	0.21	0.20	0.19	0.38	0.45	0.49	0.55	0.60	0.65	0.69	0.72	0.72	0.72	0.70	0.70	0.75	0.57	0.46	0.39	0.34	0.31	0.28
	L	0.04	0.04	0.03	0.02	0.02	0.23	0.41	0.51	0.51	0.45	0.39	0.36	0.33	0.31	0.28	0.26	0.23	0.19	0.15	0.12	0.10	0.08	0.06	0.05
NE	M	0.07	0.06	0.06	0.05	0.04	0.21	0.36	0.44	0.45	0.40	0.36	0.33	0.31	0.30	0.28	0.26	0.23	0.21	0.17	0.15	0.13	0.11	0.09	0.08
	H	0.09	0.08	0.08	0.07	0.07	0.23	0.37	0.44	0.44	0.39	0.34	0.31	0.29	0.27	0.26	0.24	0.22	0.20	0.17	0.14	0.13	0.12	0.11	0.10
	L	0.04	0.03	0.03	0.02	0.02	0.19	0.37	0.51	0.57	0.57	0.50	0.42	0.37	0.32	0.29	0.25	0.22	0.19	0.15	0.12	0.10	0.08	0.06	0.05
E	M	0.07	0.06	0.06	0.05	0.05	0.18	0.33	0.44	0.50	0.51	0.46	0.39	0.35	0.31	0.29	0.26	0.23	0.21	0.17	0.15	0.13	0.11	0.10	0.08
	H	0.09	0.09	0.08	0.08	0.07	0.20	0.34	0.45	0.49	0.49	0.43	0.36	0.32	0.29	0.26	0.24	0.22	0.19	0.17	0.15	0.13	0.12	0.11	0.10
	L	0.05	0.04	0.04	0.03	0.03	0.13	0.28	0.43	0.55	0.62	0.63	0.57	0.48	0.42	0.37	0.33	0.28	0.24	0.19	0.15	0.12	0.10	0.08	0.07
SE	M	0.09	0.08	0.07	0.06	0.05	0.14	0.26	0.38	0.48	0.54	0.56	0.51	0.45	0.40	0.36	0.33	0.29	0.25	0.21	0.18	0.16	0.14	0.12	0.10
	H	0.11	0.10	0.10	0.09	0.08	0.17	0.28	0.40	0.49	0.53	0.53	0.48	0.41	0.36	0.33	0.30	0.27	0.24	0.20	0.18	0.16	0.14	0.13	0.12
	L	0.08	0.07	0.05	0.04	0.04	0.06	0.09	0.14	0.22	0.34	0.48	0.59	0.65	0.65	0.59	0.50	0.43	0.36	0.28	0.22	0.18	0.15	0.12	0.10
S	M	0.12	0.11	0.09	0.08	0.07	0.08	0.11	0.14	0.21	0.31	0.42	0.52	0.57	0.58	0.53	0.47	0.41	0.36	0.29	0.25	0.21	0.18	0.16	0.14
	H	0.13	0.12	0.12	0.11	0.10	0.11	0.14	0.17	0.24	0.33	0.43	0.51	0.56	0.55	0.50	0.43	0.37	0.32	0.26	0.22	0.20	0.18	0.16	0.15
	L	0.12	0.10	0.08	0.06	0.05	0.06	0.08	0.10	0.12	0.14	0.16	0.24	0.36	0.49	0.60	0.66	0.66	0.58	0.43	0.33	0.27	0.22	0.18	0.14
SW	M	0.15	0.14	0.12	0.10	0.09	0.09	0.10	0.12	0.13	0.15	0.17	0.23	0.33	0.44	0.53	0.58	0.59	0.53	0.41	0.33	0.28	0.24	0.21	0.18
	H	0.15	0.14	0.13	0.12	0.11	0.12	0.13	0.14	0.16	0.17	0.19	0.25	0.34	0.44	0.52	0.56	0.56	0.49	0.37	0.30	0.25	0.21	0.19	0.17
	L	0.12	0.10	0.08	0.06	0.05	0.06	0.07	0.08	0.10	0.11	0.12	0.14	0.20	0.32	0.45	0.57	0.64	0.61	0.44	0.34	0.27	0.22	0.18	0.14
W	M	0.15	0.13	0.11	0.10	0.09	0.09	0.09	0.10	0.11	0.12	0.13	0.14	0.19	0.29	0.40	0.50	0.56	0.55	0.41	0.33	0.27	0.23	0.20	0.17
	H	0.14	0.13	0.12	0.11	0.10	0.11	0.12	0.13	0.14	0.14	0.15	0.16	0.21	0.30	0.40	0.49	0.54	0.52	0.38	0.30	0.24	0.21	0.18	0.16
	L	0.11	0.09	0.08	0.06	0.05	0.06	0.08	0.10	0.12	0.14	0.16	0.17	0.19	0.23	0.33	0.47	0.59	0.60	0.42	0.33	0.26	0.21	0.17	0.14
NW	M	0.14	0.12	0.11	0.09	0.08	0.09	0.10	0.11	0.13	0.14	0.16	0.17	0.18	0.21	0.30	0.42	0.51	0.54	0.39	0.32	0.26	0.22	0.19	0.16
	H	0.14	0.12	0.11	0.10	0.10	0.10	0.12	0.13	0.15	0.16	0.18	0.18	0.19	0.22	0.30	0.41	0.50	0.51	0.36	0.29	0.23	0.20	0.17	0.15
	L	0.11	0.09	0.07	0.06	0.05	0.07	0.14	0.24	0.36	0.48	0.58	0.66	0.72	0.74	0.73	0.67	0.59	0.47	0.37	0.29	0.24	0.19	0.16	0.13
HOR	M	0.16	0.14	0.12	0.11	0.09	0.11	0.16	0.24	0.33	0.43	0.52	0.59	0.64	0.67	0.66	0.62	0.56	0.47	0.38	0.32	0.28	0.24	0.21	0.18
	H	0.17	0.16	0.15	0.14	0.13	0.15	0.20	0.28	0.36	0.45	0.52	0.59	0.62	0.64	0.62	0.58	0.51	0.42	0.35	0.29	0.26	0.23	0.21	0.19

L = Light construction: frame exterior wall, 2-in concrete floor slab, approximately 30 lb of material/ft^2 of floor area.

M = Medium construction: 4-in concrete exterior wall, 4-in concrete floor slab, approximately 70 lb of building material/ft^2 of floor area.

H = Heavy construction: 6-in concrete exterior wall, 6-in concrete floor slab, approximately 130 lb of building material/ft^2 of floor area.

Table 3.11 (CLF)

Cooling load factors for glass with interior shading. *(From ASHRAE, 1989, with permission.)*

Fenestration facing	Solar time, h																							
	0100	0200	0300	0400	0500	0600	0700	0800	0900	1000	1100	1200	1300	1400	1500	1600	1700	1800	1900	2000	2100	2200	2300	2400
N	0.08	0.07	0.06	0.06	0.07	0.13	0.66	0.76	0.73	0.80	0.86	0.89	0.89	0.86	0.82	0.75	0.78	0.91	0.24	0.18	0.15	0.13	0.11	0.10
NE	0.03	0.02	0.02	0.02	0.02	0.36	0.76	0.74	0.58	0.37	0.29	0.27	0.26	0.24	0.22	0.20	0.16	0.12	0.06	0.05	0.04	0.04	0.03	0.03
E	0.03	0.02	0.02	0.02	0.02	0.47	0.72	0.80	0.76	0.62	0.41	0.27	0.24	0.22	0.20	0.17	0.14	0.11	0.06	0.05	0.05	0.04	0.03	0.03
SE	0.03	0.03	0.02	0.02	0.02	0.30	0.57	0.74	0.81	0.79	0.68	0.49	0.33	0.28	0.25	0.22	0.18	0.13	0.08	0.07	0.06	0.05	0.04	0.04
S	0.04	0.04	0.03	0.03	0.03	0.09	0.16	0.23	0.38	0.58	0.75	0.83	0.80	0.68	0.50	0.35	0.27	0.19	0.11	0.09	0.08	0.07	0.06	0.05
SW	0.05	0.05	0.04	0.04	0.03	0.07	0.11	0.14	0.16	0.19	0.22	0.38	0.59	0.75	0.83	0.81	0.69	0.45	0.16	0.12	0.10	0.09	0.07	0.06
W	0.05	0.05	0.04	0.04	0.03	0.06	0.09	0.11	0.13	0.15	0.16	0.17	0.31	0.53	0.72	0.82	0.81	0.61	0.16	0.12	0.10	0.08	0.07	0.06
NW	0.05	0.04	0.04	0.03	0.03	0.07	0.11	0.14	0.17	0.19	0.20	0.21	0.22	0.30	0.52	0.73	0.82	0.69	0.16	0.12	0.10	0.08	0.07	0.06
HOR	0.06	0.05	0.04	0.04	0.03	0.12	0.27	0.44	0.59	0.72	0.81	0.85	0.85	0.81	0.71	0.58	0.42	0.25	0.14	0.12	0.10	0.08	0.07	0.06

CONFIDENTIAL

(Continued) Table 3.12

"a" coefficient	"b" classification	Cooling load factors when lights are on for 12 h: Number of hours after lights are turned on																						
		0	1	2	3	4	5	6	7	8	9	10	11	12	13	14	15	16	17	18	19	20	21	22	23
0.45	A	0.05	0.49	0.59	0.67	0.73	0.78	0.83	0.86	0.89	0.91	0.93	0.94	0.95	0.51	0.41	0.33	0.27	0.22	0.17	0.14	0.11	0.09	0.07	0.06
	B	0.13	0.57	0.61	0.65	0.69	0.72	0.75	0.77	0.79	0.82	0.83	0.85	0.87	0.43	0.39	0.35	0.31	0.28	0.25	0.23	0.21	0.18	0.17	0.15
	C	0.19	0.63	0.65	0.67	0.69	0.71	0.73	0.74	0.76	0.77	0.79	0.80	0.81	0.37	0.35	0.33	0.31	0.29	0.27	0.26	0.24	0.23	0.21	0.20
	D	0.22	0.66	0.67	0.68	0.69	0.70	0.71	0.72	0.73	0.74	0.74	0.75	0.76	0.32	0.31	0.30	0.29	0.28	0.27	0.26	0.26	0.25	0.24	0.23
0.55	A	0.04	0.58	0.66	0.73	0.78	0.82	0.86	0.89	0.91	0.93	0.94	0.95	0.96	0.42	0.34	0.27	0.22	0.18	0.14	0.11	0.09	0.07	0.06	0.05
	B	0.11	0.65	0.68	0.72	0.74	0.77	0.79	0.81	0.83	0.85	0.86	0.88	0.89	0.35	0.32	0.28	0.26	0.23	0.21	0.19	0.17	0.15	0.14	0.12
	C	0.15	0.69	0.71	0.73	0.75	0.76	0.78	0.79	0.80	0.81	0.83	0.84	0.85	0.30	0.29	0.27	0.25	0.24	0.22	0.21	0.20	0.19	0.17	0.16
	D	0.18	0.72	0.73	0.74	0.75	0.76	0.76	0.77	0.78	0.78	0.79	0.80	0.80	0.26	0.25	0.24	0.24	0.23	0.22	0.22	0.21	0.20	0.20	0.19
0.65	A	0.03	0.67	0.74	0.79	0.83	0.86	0.89	0.91	0.93	0.94	0.95	0.96	0.97	0.33	0.26	0.21	0.17	0.14	0.11	0.09	0.07	0.06	0.05	0.04
	B	0.09	0.73	0.75	0.78	0.80	0.82	0.84	0.85	0.87	0.88	0.89	0.90	0.91	0.27	0.25	0.22	0.20	0.18	0.16	0.15	0.13	0.12	0.11	0.10
	C	0.12	0.76	0.78	0.79	0.80	0.81	0.83	0.84	0.85	0.86	0.86	0.87	0.88	0.24	0.22	0.21	0.20	0.19	0.17	0.16	0.15	0.14	0.14	0.13
	D	0.14	0.79	0.79	0.80	0.80	0.81	0.82	0.82	0.83	0.83	0.84	0.84	0.85	0.20	0.20	0.19	0.18	0.18	0.17	0.17	0.16	0.16	0.15	0.15
0.75	A	0.02	0.77	0.81	0.85	0.88	0.90	0.92	0.94	0.95	0.96	0.97	0.97	0.98	0.23	0.19	0.15	0.12	0.10	0.08	0.06	0.05	0.04	0.03	0.03
	B	0.06	0.81	0.82	0.84	0.86	0.87	0.88	0.90	0.91	0.92	0.92	0.93	0.94	0.19	0.18	0.16	0.14	0.13	0.12	0.10	0.09	0.08	0.08	0.07
	C	0.09	0.83	0.84	0.85	0.86	0.87	0.88	0.88	0.89	0.90	0.90	0.91	0.91	0.17	0.16	0.15	0.14	0.13	0.12	0.12	0.12	0.11	0.10	0.10	0.09
	D	0.10	0.85	0.85	0.86	0.86	0.86	0.87	0.87	0.88	0.88	0.88	0.89	0.89	0.14	0.14	0.14	0.13	0.13	0.12	0.12	0.12	0.11	0.11	0.11

CONFIDENTIAL

(Continued) Table 3.12

"a" coefficient				"b" classification				
					Room air circulation and Type of supply and return§			
a	Furnishings	Air supply and return	Type of light fixture	Room envelope Construction‡ (mass of floor area, kg/m²)	Low	Medium	High	Very high
0.45	Heavyweight, simple furnishings, no carpet	Low rate; supply and return below ceiling ($V \leq 2.5$)†	Recessed, not vented	50-mm wood floor (50)	B	A	A	A
0.55	Ordinary furniture, no carpet	Medium to high ventilation rate; supply and return below ceiling or through ceiling grill and space ($V \geq 2.5$)†	Recessed, not vented	75-mm concrete floor (200)	B	B	B	A
0.65	Ordinary furniture, with or without carpet	Medium to high ventilation rate or fan coil or induction type air-conditioning terminal unit; supply through ceiling or wall diffuser; return around light fixtures and through ceiling space ($V \geq 2.5$)†	Vented	150-mm concrete floor (370)	C	C	C	B
0.75 or greater	Any type of furniture	Ducted returns through light fixtures	Vented or free-hanging in airstream with ducted returns	200-mm concrete floor (590)	D	D	C	C
				300-mm concrete floor (780)	D	D	D	D

†V is room air supply rate in liters per second per square meter of floor area.

‡Floor covered with carpet and rubber pad; for a floor covered only with floor tile, take next classification to the right in the same row

§*Low:* Low ventilation rate—minimum required to cope with cooling load from lights and occupants in interior zone. Supply through floor, wall, or ceiling diffuser. Ceiling space not vented and h = 2.3 W/(m² · °C), where h = inside surface convection coefficient used in calculation of b.

Medium: Medium ventilation rate, supply through floor, wall, or ceiling diffuser. Ceiling space not vented and h = 3.4 W/(m² · °C).

High: Room air circulation induced by primary air of induction unit or by fan coil unit. Return through ceiling space and h = 4.5 W/(m² · °C).

Very high: High room air circulation used to minimize temperature gradients in a room. Return through ceiling space and h = 6.8 W/(m² · °C).

Table 3.13

Cooling load factors for unhooded appliances. (*From ASHRAE, 1989, with permission.*)

Total operational hours	Hours after appliances are on											
	1	2	3	4	5	6	7	8	9	10	11	12
2	0.56	0.64	0.15	0.11	0.08	0.07	0.06	0.05	0.04	0.04	0.03	0.03
4	0.57	0.65	0.71	0.75	0.23	0.18	0.14	0.12	0.10	0.08	0.07	0.06
6	0.57	0.65	0.71	0.76	0.79	0.82	0.29	0.22	0.18	0.15	0.13	0.11
8	0.58	0.66	0.72	0.76	0.80	0.82	0.85	0.87	0.33	0.26	0.21	0.18
10	0.60	0.68	0.73	0.77	0.81	0.83	0.85	0.87	0.89	0.90	0.36	0.29
12	0.62	0.69	0.75	0.79	0.82	0.84	0.86	0.88	0.89	0.91	0.92	0.93
14	0.64	0.71	0.76	0.80	0.83	0.85	0.87	0.89	0.90	0.92	0.93	0.93
16	0.67	0.74	0.79	0.82	0.85	0.87	0.89	0.90	0.91	0.92	0.93	0.94
18	0.71	0.78	0.82	0.85	0.87	0.89	0.90	0.92	0.93	0.94	0.94	0.95

Total operational hours	Hours after appliances are on											
	13	14	15	16	17	18	19	20	21	22	23	24
2	0.02	0.02	0.02	0.02	0.01	0.01	0.01	0.01	0.01	0.01	0.01	0.01
4	0.05	0.05	0.04	0.04	0.03	0.03	0.02	0.02	0.02	0.02	0.01	0.01
6	0.10	0.08	0.07	0.06	0.06	0.05	0.04	0.04	0.03	0.03	0.03	0.02
8	0.15	0.13	0.11	0.10	0.09	0.08	0.07	0.06	0.05	0.04	0.04	0.03
10	0.24	0.20	0.17	0.15	0.13	0.11	0.10	0.08	0.07	0.07	0.06	0.05
12	0.38	0.31	0.25	0.21	0.18	0.16	0.14	0.12	0.11	0.09	0.08	0.07
14	0.94	0.95	0.40	0.32	0.27	0.23	0.19	0.17	0.15	0.13	0.11	0.10
16	0.95	0.96	0.96	0.97	0.42	0.34	0.28	0.24	0.20	0.18	0.15	0.13
18	0.96	0.96	0.97	0.97	0.97	0.98	0.43	0.35	0.29	0.24	0.21	0.18

Table 3.14

Cooling load factors for sensible heat from occupants. (*From ASHRAE, 1989, with permission.*)

Total hours in space	Hours after each entry into space											
	1	2	3	4	5	6	7	8	9	10	11	12
2	0.49	0.58	0.17	0.13	0.10	0.08	0.07	0.06	0.05	0.04	0.04	0.03
4	0.49	0.59	0.66	0.71	0.27	0.21	0.16	0.14	0.11	0.10	0.08	0.07
6	0.50	0.60	0.67	0.72	0.76	0.79	0.34	0.26	0.21	0.18	0.15	0.13
8	0.51	0.61	0.67	0.72	0.76	0.80	0.82	0.84	0.38	0.30	0.25	0.21
10	0.53	0.62	0.69	0.74	0.77	0.80	0.83	0.85	0.87	0.89	0.42	0.34
12	0.55	0.64	0.70	0.75	0.79	0.81	0.84	0.86	0.88	0.89	0.91	0.92
14	0.58	0.66	0.72	0.77	0.80	0.83	0.85	0.87	0.89	0.90	0.91	0.92
16	0.62	0.70	0.75	0.79	0.82	0.85	0.87	0.88	0.90	0.91	0.92	0.93
18	0.66	0.74	0.79	0.82	0.85	0.87	0.89	0.90	0.92	0.93	0.94	0.94

Total hours in space	Hours after each entry into space											
	13	14	15	16	17	18	19	20	21	22	23	24
2	0.03	0.02	0.02	0.02	0.02	0.01	0.01	0.01	0.01	0.01	0.01	0.01
4	0.06	0.06	0.05	0.04	0.04	0.03	0.03	0.03	0.02	0.02	0.02	0.01
6	0.11	0.10	0.08	0.07	0.06	0.06	0.05	0.04	0.04	0.03	0.03	0.03
8	0.18	0.15	0.13	0.12	0.10	0.09	0.08	0.07	0.06	0.05	0.05	0.04
10	0.28	0.23	0.20	0.17	0.15	0.13	0.11	0.10	0.09	0.08	0.07	0.06
12	0.45	0.36	0.30	0.25	0.21	0.19	0.16	0.14	0.12	0.11	0.09	0.08
14	0.93	0.94	0.47	0.38	0.31	0.26	0.23	0.20	0.17	0.15	0.13	0.11
16	0.94	0.95	0.95	0.96	0.49	0.39	0.33	0.28	0.24	0.20	0.18	0.16
18	0.95	0.96	0.96	0.97	0.97	0.97	0.50	0.40	0.33	0.28	0.24	0.21

CLF = 1.0 for systems shut down at night and for high-occupant densities such as in theaters and auditoriums.